Quartz™ by StoneL

Valve monitor series QC/QG/QN/QX

Installation, maintenance and operating instructions

StoneL publication 105406revD

7 QZ 70 en • 11/2020

Table of contents

Read these instructions first!

These instructions provide information about safe handling and operation of the limit switch. If you require additional assistance, please contact the manufacturer or manufacturer's representative. Addresses and phone numbers are printed on the back cover.

Save these instructions.

Subject to change without notice.

Table of contents continued

1 General

1.1 Introduction

This manual incorporates the Installation, Maintenance and Operation (IMO) instructions for the Quartz series valve monitors. The Quartz is designed to provide position feedback indication of on/off automated valves.

Note

The selection and use of the Quartz in a specific application requires close consideration of detailed aspects. Due to the nature of the product, this manual cannot cover all the likely situations that may occur when installing, using, or servicing the Quartz. If you are uncertain about the use of this device, or its suitability for your intended use, please contact StoneL for assistance.

1.2 Title plate markings

The Quartz has an identification plate attached to the cover.

1. Identification plate markings
2. Model
3. Serial number
4. Date
5. Sensor rating
6. Transmitter rating *(if installed)*
7. Protection class information*
8. Note
9. Warning
10. Approval markings*
11. Logo

Note

* See page 51 for specific product markings.

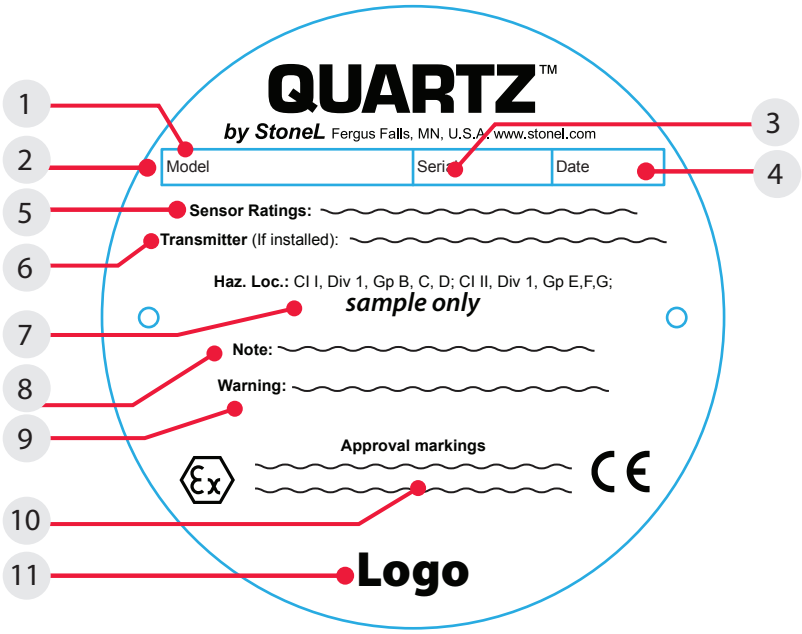

1.3 CE markings

The Quartz by StoneL meets the requirements of European Directives and has been marked according to the directive.

1.4 Recycling and disposal

Most of the Quartz parts can be recycled if sorted according to material. In addition, separate recycling and disposal instructions are available from us. A Quartz can also be returned to us for recycling and disposal for a fee.

1.5 Safety precautions

Do not exceed the permitted values! Exceeding the permitted values marked on the Quartz may cause damage to the switch and to equipment attached to the switch and could lead to uncontrolled pressure release in the worst case. Damage to the equipment and personal injury may result.

To prevent ignition of hazardous atmospheres, replace cover before energizing the electrical circuits. Keep cover tightly closed when in operation.

1.6 Assembly drawing

1. Title plate
2. Cover
3. Thru-bolt mounting bolt
4. Cover lock *(cast cover model only)*
5. Function
6. Cams
7. Internal ground lug
8. Housing
9. Thru-bolt retaining o-rings
10. Visual indicator cover
11. Visual indicator drum
12. Coupler spacer
13. Drive block
14. Drive block retaining screw
15. Mounting plate retaining screws
16. Extended visual indicator mounting plate
17. Actuator shaft

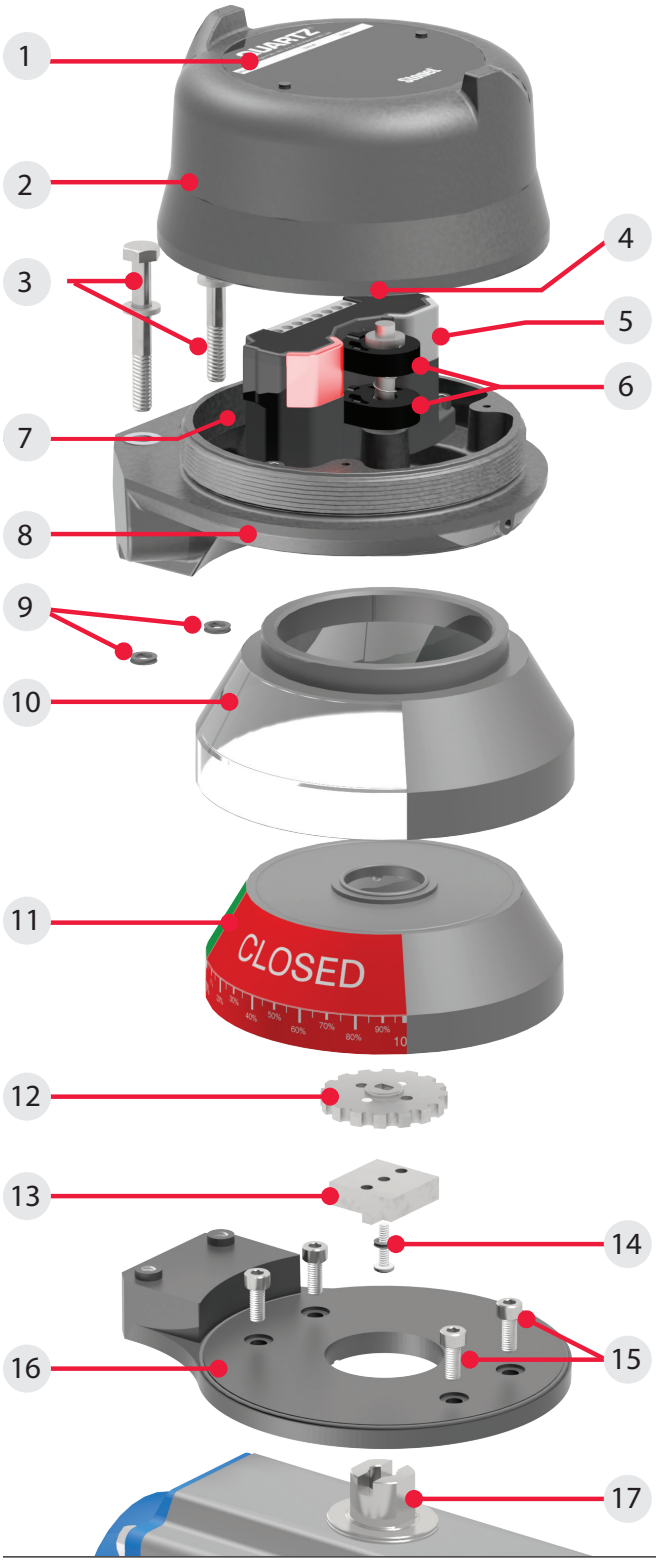

1.7 Specifications for all models

See page 10 for function specific details.

Specifications		
Materials of construction		
Housing & cover	Epoxy-coated anodized marine grade aluminum or CF3M stainless steel	
Clear cover & indicator	Lexan® polycarbonate	
Elastomer seals	Buna-N; optional EPDM	
Drive shaft	Stainless steel	
Drive bushing	Bronze, oil impregnated	
Fasteners	Stainless steel	
Operating temperature range	-40° C to 80° C (-40° F to 176° F) *typical* -55° C to 80° C (-67° F to 176° F) *QC series only*	
Enclosure protection	Type 4, 4X, 6 and IP66 / IP67	
Unit weights		
Aluminum cover	Short Medium Tall	1.27 kg / 2.80 lb 1.55 kg / 3.42 lb 1.75 kg / 2.85 lb
Clear cover	Short Medium Tall	1.20 kg / 2.64 lb 1.27 kg / 2.79 lb 1.39 kg / 3.06 lb
Stainless steel cover	Short Medium Tall	3.84 kg / 6.25 lb 3.00 kg / 6.80 lb 3.50 kg / 7.70 lb
Unit dimensions for Output option "S" - Short visual indicator *(Consult factory for cover sizes on specific models)*		
Short cover	Unit height Cover removal clearance	102 mm [4.00 in] 143 mm [5.62 in]
Medium cover	Unit height Cover removal clearance	123 mm [4.86 in] 184 mm [7.24 in]
Tall cover	Unit height Cover removal clearance	155 mm [6.10 in] 241 mm [9.48 in]
Unit dimensions for Output option "N" - Extended visual indicator *(Consult factory for cover sizes on specific models)*		
Short cover	Unit height Cover removal clearance	127 mm [5.03 in] 143 mm [5.62 in]
Medium cover	Unit height Cover removal clearance	148 mm [5.86 in] 184 mm [7.24 in]
Tall cover	Unit height Cover removal clearance	186 mm [7.10 in] 241 mm [9.48 in]
Environmental conditions		
Location	Indoor and outdoor	
Maximum altitude	5000 m	
Maximum humidity	90%	
Pollution degree	4	
Ratings and approvals*	See page 51 or StoneL's official website	
* Only models listed on StoneL's official website are approved per specific rating.		
* Functional Safety (SIL) approvals for specific models and Quartz SIL safety manual also available on StoneL's official website.		

1.8 Dimensions

Output option “S” - Short visual indicator

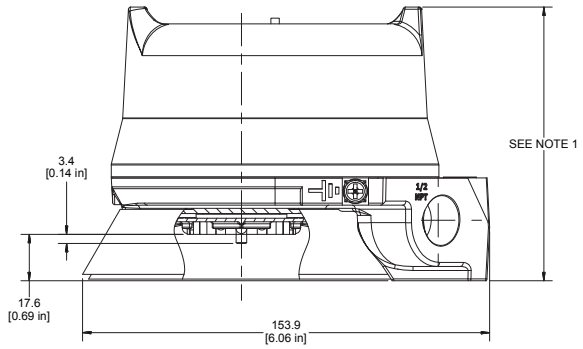

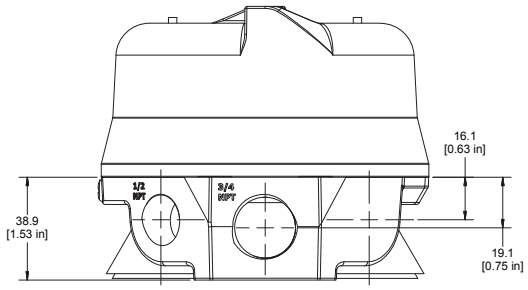

Output option “N” - Extended visual indicator

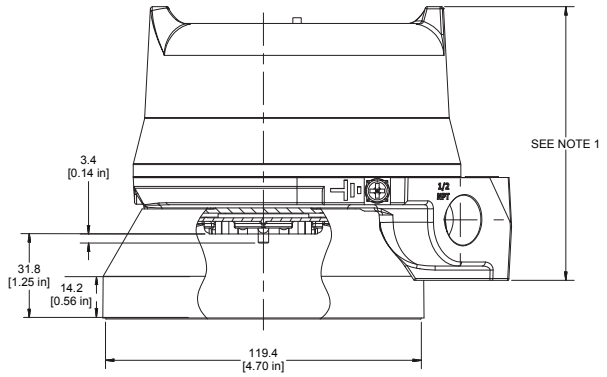

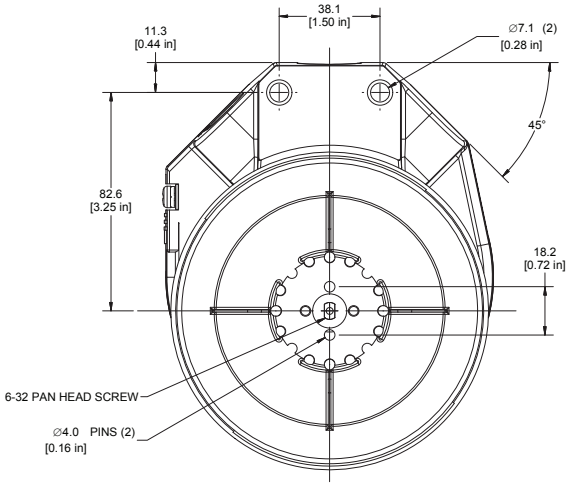

Note 1
Cover height varies based on model number.

Short cover = 102 mm [4.0 in]
Dual module and 2-switch models use short covers.

Medium cover = 123.4 mm [4.86 in]
Transmitter only units

Tall cover = 155.4 mm [6.12 in]
Four switch models and transmitter with switch models

Quartz certified dimensional drawing can be found under the download tab at www.stoneL.com/en/products/Quartz

2 Assembly and mounting

2.1 Typical Quartz with extended visual indicator assembly figure

A. Quartz unit
B. Thru-bolt mounting bolts (2)
C. Cover lock *(cast cover model only)*
D. External ground lug (Internal ground lug provided)
E. Indicator cover setscrew
F. Coupler spacer
G. Thru-bolt retaining o-rings
H. Drive block
I. Drive block retaining screw
J. Mounting plate retaining screws (4)
K. Extended visual indicator mounting plate

2.2 Instructions for mounting with extended visual indicator

Special notes:

- Mounting of the Quartz requires a StoneL mounting kit specific to the actuator the Quartz is to be mounted to.
- It is recommended that thread lubricant or anti-seize be used on the mounting kit fasteners (Items B, I and J) prior to assembly.
- In high cycle or high vibration applications, blue Loctite® may be used on the mounting kit fasteners in place of lubricant or anti-seize.
- The instructions below are for a typical mounting application. Refer to StoneL.com for kit specific layout drawings.

Steps

Quartz unit and mounting kit are supplied separately. From Quartz shipping container, ensure items A and F are present. From the mounting kit, ensure items B, G, H, I, J and K are present.

1. Locate the extended visual indicator mounting plate (Item K) and place on the actuator. Using an M4 allen wrench, fasten with the four mounting plate retaining screws (Item J). Torque screws to 25 to 30 in.lbs (2.8 to 3.4 Nm).
2. Loosen indicator cover setscrew (Item E) with an M2 allen wrench and rotate indicator cover to desired viewing angle and retighten setscrew.
3. Remove indicator drum screw from Quartz unit.
4. Rotate indicator drum to desired position. (OPEN or CLOSED appearing through indicator window.)
5. Attached drive block (Item H) to the coupler spacer (Item F) with the provided drive block retaining screw (Item I).
6. Place Quartz unit onto the extended visual indicator mounting plate, ensuring the drive block tabs engage the slot in the actuator shaft.
7. Slide Thru-bolt mounting bolts (Item B) with washers into housing and fit Thru-bolt retaining o-rings (Item G) over bolts to retain Thru-bolt mounting bolts in the housing.
8. With an 7⁄16" socket, tighten down with the Thru-bolt mounting bolts. Torque bolts to 15 to 20 in.lbs (1.7 to 2.3 Nm).
9. Operate actuator to full open and full closed positions and check for proper alignment between switch and actuator. Eccentricity of shaft must not be greater than 0.254 mm [0.1 in] from centerline.
10. Fine-tune the visual indicator cover by repeating steps 2 as needed.
11. Follow additional Touch & Tune instructions found in section 4 related to the specific model being installed.

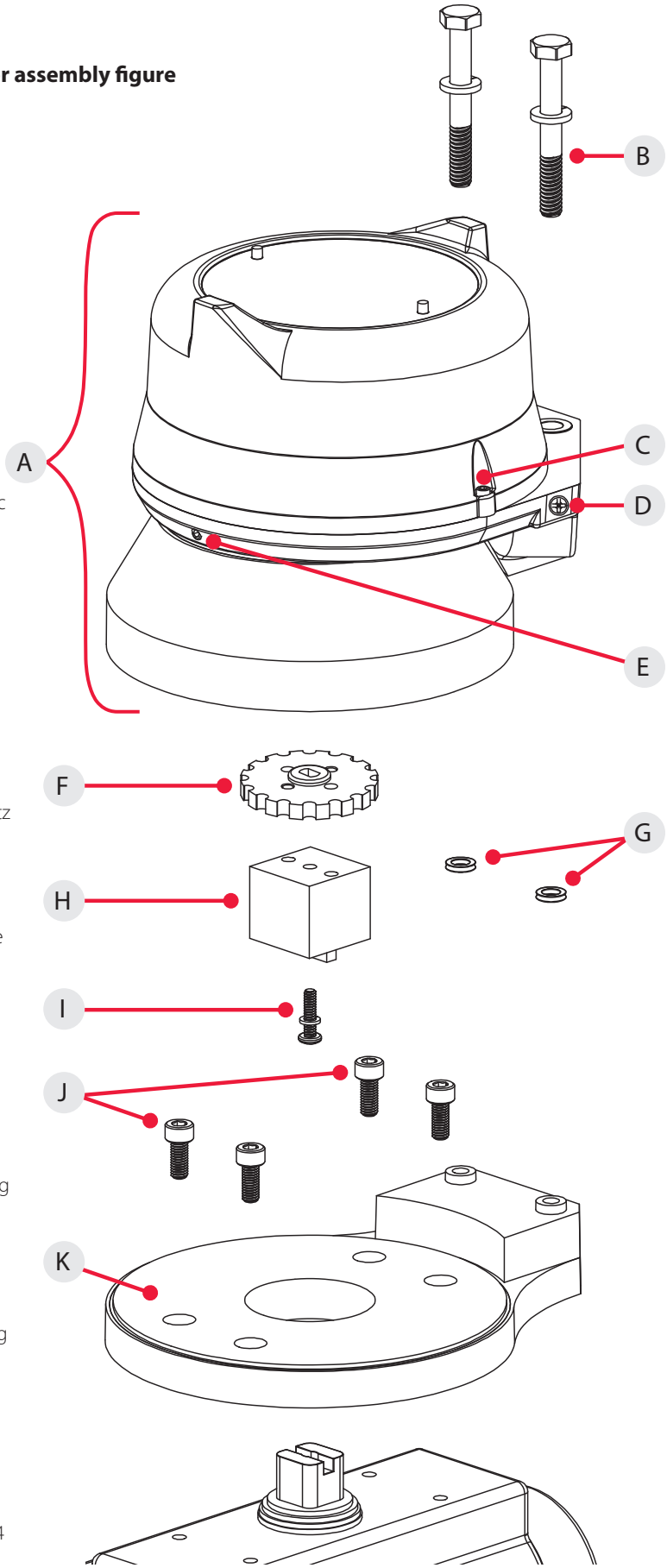

Fig. 2.1 extended visual indicator assembly figure

2.3 Typical Quartz with short visual indicator assembly figure

A. Quartz unit
B. Thru-bolt mounting bolts (2)
C. Cover lock *(cast cover model only)*
D. External ground lug (Internal ground lug provided)
E. Indicator cover setscrew
F. Coupler spacer
G. Thru-bolt retaining o-rings
H. Drive block
I. Drive block retaining screw
J. Mounting plate retaining screws (2)
K. Mounting plate

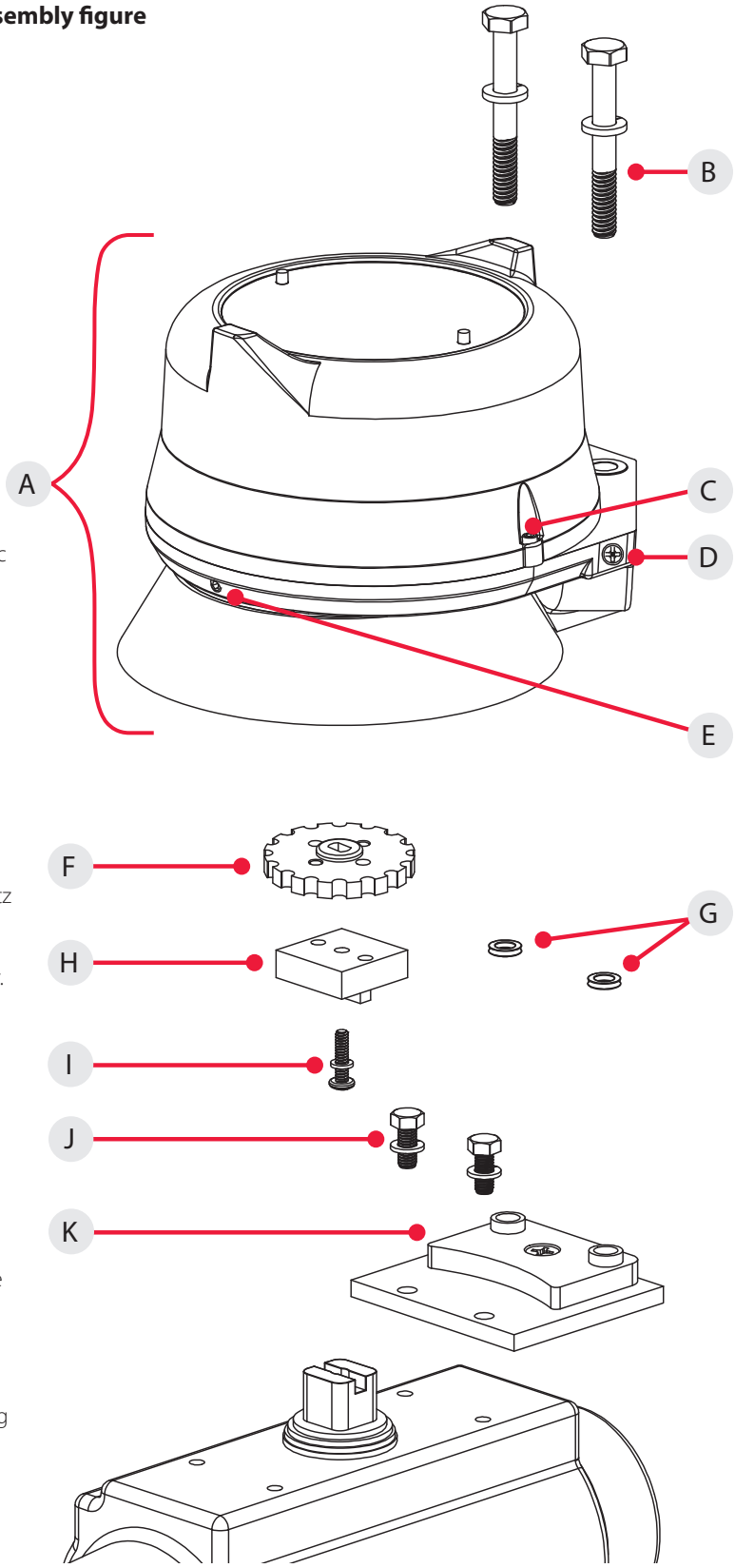

Fig. 2.3 short visual indicator assembly figure

2.4 Instructions for mounting with short visual indicator

Special notes:

- Mounting of the Quartz requires a StoneL mounting kit specific to the actuator the Quartz is to be mounted to.
- It is recommended that thread lubricant or anti-seize be used on the mounting kit fasteners (Items B, I and J) prior to assembly.
- In high cycle or high vibration applications, blue Loctite® may be used on the mounting kit fasteners in place of lubricant or anti-seize.
- The instructions below are for a typical mounting application. Refer to StoneL.com for kit specific layout drawings.

Steps

Quartz unit and mounting kit are supplied separately. From Quartz shipping container, ensure items A and F are present. From the mounting kit, ensure items B, G, H, I, J and K are present.

1. Locate the mounting plate (Item K) and place on the actuator. Using the provided mounting plate retaining screws (Item J), fasten the mounting plate to the actuator.
2. Loosen indicator cover setscrew (Item E) with an M2 allen wrench and rotate indicator cover to desired viewing angle and retighten setscrew.
3. Remove indicator drum screw from Quartz unit.
4. Rotate indicator drum to desired position. (OPEN or CLOSED appearing through indicator window.)
5. Attached drive block (Item H) to the coupler spacer (Item F) with the provided drive block retaining screw (Item I).
6. Place Quartz unit onto the mounting plate, ensuring the drive block tabs engage the slot in the actuator shaft.
7. Slide Thru-bolt mounting bolts (Item B) with washers into housing and fit Thru-bolt retaining o-rings (Item G) over bolts to retain Thru-bolt mounting bolts in the housing.
8. With an 7⁄16" socket, tighten down with the Thru-bolt mounting bolts. Torque bolts to 15 to 20 in.lbs (1.7 to 2.3 Nm).
9. Operate actuator to full open and full closed positions and check for proper alignment between switch and actuator. Eccentricity of shaft must not be greater than 0.254 mm [0.1 in] from centerline.
10. Fine-tune the visual indicator cover by repeating steps 2 as needed.
11. Follow additional Touch & Tune instructions found in section 4 related to the specific model being installed.

3 Maintenance, repair and installation

3.1 Maintenance and repair

Maintenance or repair of StoneL Quartz equipment must only be done by StoneL or by qualified personnel that are knowledgeable about the installation of electromechanical equipment in hazardous areas. All parts needed for repairs or maintenance must be purchased through a StoneL authorized distributor to maintain warranty and to ensure the safety and compliance of the equipment.
No routine maintenance of StoneL Quartz units is required.

3.2 Installation

Caution: To maintain safety, only power supplies that provide Double/Reinforced insulation, such as those with PELV/SELV outputs, shall be used. (As applicable)

Attention: If the unit is used in a manner not specified by StoneL, the protection provided by it may be impaired.

Attention: If required, the Quartz housing can be grounded to earth potential by either the internal or external ground lug. (See Assembly drawing 1.6 Item 7 on page 5, Figure 2.1 Item D on page 7, and Figure 2.3 Item D on page 8)

Attention: In order to maintain enclosure type and IP ratings, cover shall be tightened by hand a minimum of ¼ turn after cover engages o-ring. Do not use any tool to tighten the cover.

Field wiring

- It is the responsibility of the installer, or end user, to install this product in accordance with the National Electrical Code (NFPA 70) or any other national or regional code defining proper practices.
- This product comes shipped with conduit covers in an effort to protect the internal components from debris during shipment and handling. It is the responsibility of the receiving and/or installing personnel to provide appropriate permanent sealing devices to prevent the intrusion of debris or moisture when stored or installed outdoors.

4 Function specific details

4.1 Inductive proximity sensors

4.1.1 Dual module SST sensors (33)

Applicable models	
QN33_, QX33_	
Specifications	
Configuration	(2) SST solid state sensors Wire terminals for one or two solenoids
Operation	NO/NC (cam selectable)
Maximum current	Inrush 1.0 amp @ 125 VAC/VDC Continuous 0.1 amp @ 125 VAC/VDC
Minimum on current	2 mA (VAC/VDC)
Voltage range	24 - 125 VAC 50/60 Hz; 8 - 125 VDC
Maximum voltage drop	6.5 volts @ 10 mA 7.5 volts @ 100 mA
Leakage current	AC circuits 0.25 mA DC circuits 0.15 mA
LED indication	Bottom sensor: red Top sensor: green
Temperature range	-40° to 80° C
Operating life	Unlimited
Warranty	
All mechanical parts	Two years
Sensor module	Five years

Wiring diagram

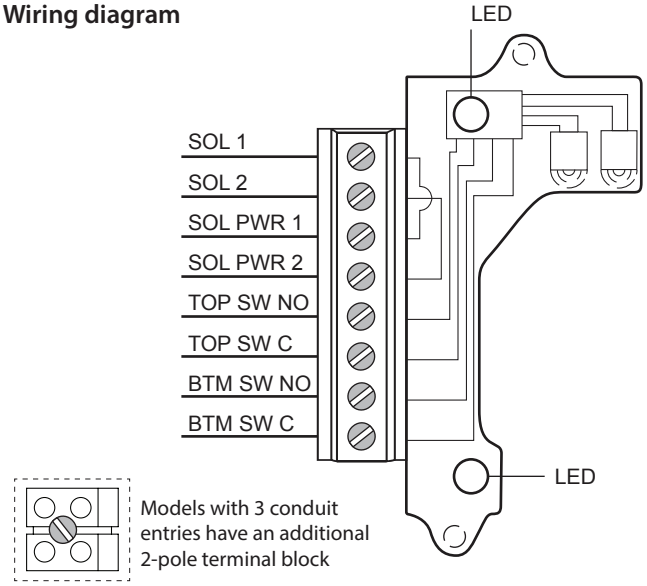

WARNING
Failure to use a series load resistor when bench testing sensors with a power supply will result in permanent damage to the unit.

Bench test procedure

Use StoneL Light Read Tester. Or use a 24 VDC or 120 VAC power supply with series load resistor (2kΩ - 6kΩ).

Touch & Tune switch setting

All adjustments assume you are looking down on the top of the sensors. The edge of the cam metal strip will be at the edge of the sensor target when activation occurs. When the cam is released be sure it slides fully onto the spline. One spline tooth setting is 4 ½°.

For normally open function (Fig. 1)

1. With the valve in the closed position and if the valve turns counterclockwise to open, set both cams so that the metal activation strips are 180° from each other with the bottom cam set in the middle of the sensor target.
2. Lift the bottom cam and turn counterclockwise until the red LED goes out then clockwise again until the red LED is lit. (Reverse the direction of the cam if the valve opens clockwise.)
3. Move the valve to the opposite position (open), push down on the top cam and rotate counterclockwise until the green LED is lit. (Reverse the direction of the cam if the valve opens clockwise.)

For the normally open operation, both LEDs will be off during the actuation period. If the optional green CLOSED visual indicator is used, the colors would be reversed in steps 1 and 2.

For normally closed function (Fig. 2)

1. With the valve in the closed position, set both cams so that the metal activation strips are aligned with each other and set in the middle of the sensor targets.
2. If the valve turns counterclockwise to open, pull up on the bottom cam and rotate clockwise until the red LED goes out. (If the valve turns clockwise to open, rotate bottom cam counterclockwise until it goes out.)
3. Operate the valve to the opposite position (open). Push down on the top cam. If the green LED is off, rotate top cam clockwise until it is lit. When the green LED is lit, turn cam counterclockwise until the green LED goes off.

For the normally closed operation, both the red and green LEDs will be illuminated during the actuation period. The red LED is off in the closed position and the green LED is off in the open position. If the optional green CLOSED visual indicator is used the colors would be reversed in steps 1 and 2.

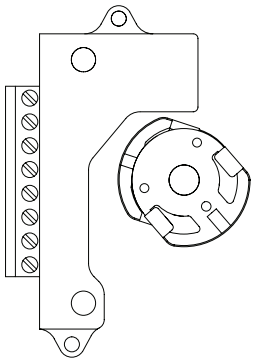

Fig. 1 cam set for normally open sensor function

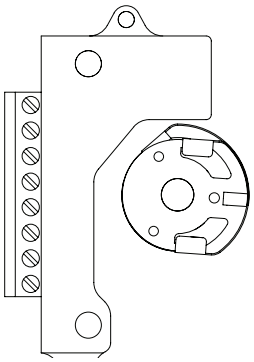

Fig. 2 cam set for normally closed sensor function

Caution: To prevent ignition of hazardous atmospheres, replace cover before energizing the electrical circuits. Keep cover tightly closed within operation.

4.1 Inductive proximity sensors

4.1.2 Dual module SST sensors (35)

Applicable models	
QC35_, QN35_, QX35_	
Specifications	
Configuration	(2) Normally open (NO) sensors Wire terminals for one or two solenoids
Maximum current	Inrush 1.0 amp @ 125 VAC/VDC Continuous 0.1 amp @ 125 VAC/VDC
Minimum on current	0.5 mA (VAC/VDC)
Voltage range	20 - 250 VAC 50/60 Hz; 8 - 250 VDC
Maximum voltage drop	6.5 volts @ 10 mA 7.2 volts @ 100 mA
Leakage current	AC circuits 0.25 mA DC circuits 0.15 mA
LED indication	Bottom sensor: red Top sensor: green
Temperature range	-40° C to 80° C (-40° F to 176° F) *typical* -55° C to 80° C (-67° F to 176° F) *QC series only*
Operating life	Unlimited
Warranty	
All mechanical parts	Two years
Sensor module	Five years

Wiring diagram

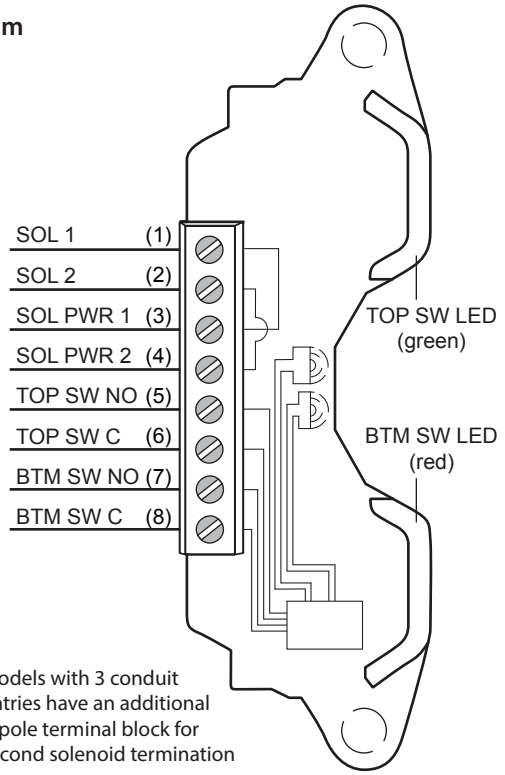

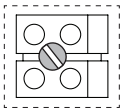

Models with 3 conduit entries have an additional 2-pole terminal block for second solenoid termination

WARNING
Failure to use a series load resistor when bench testing sensors with a power supply will result in permanent damage to the unit.

Bench test procedure

Use StoneL Light Read Tester. Or use a 24 VDC or 120 VAC power supply with series load resistor (2kΩ - 6kΩ).

Touch & Tune switch setting

All adjustments assume you are looking down on the top of the sensor module. The magnet in the cam will be centered on the sensor when activation occurs. When the cam is released be sure it slides fully onto the spline. One spline tooth setting is 4 ½°.

Valve closed to open in counterclockwise rotation (Fig. 1)

1. With the valve in the closed position, set the bottom cam by lifting up off the splined collar rotating so that the magnet is centered on the bottom sensor and the top cam is 90° from the bottom cam. Top cam is adjusted by pushing down and rotating.
2. At this time the red LED will be lit and green LED out.
3. Move valve counterclockwise to the open position. Green LED will be lit and red LED will be out. Cam adjustments are now completed.

Valve closed to open in clockwise rotation (Fig. 2)

1. With the valve in the closed position, set the bottom cam by lifting up off the splined collar rotating so that the magnet is centered on the bottom sensor and the top cam is 90° from the bottom cam. Top cam is adjusted by pushing down and rotating.
2. At this time the red LED will be lit and green LED out.
3. Move valve clockwise to the open position. Green LED will be lit and red LED will be out. Cam adjustments are now completed.

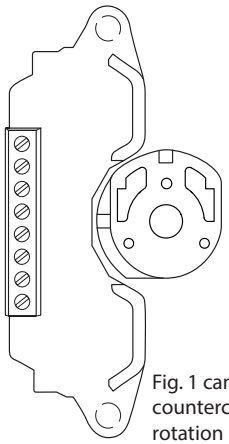

Fig. 1 cam set for counterclockwise rotation

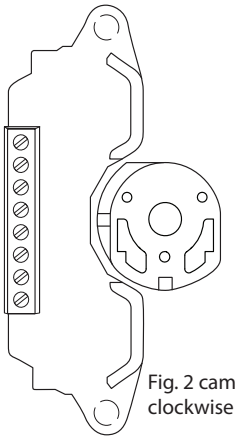

Fig. 2 cam set for clockwise rotation

Caution: To prevent ignition of hazardous atmospheres, replace cover before energizing the electrical circuits. Keep cover tightly closed within operation.

4.1 Inductive proximity sensors

4.1.3 SST solid state proximity senors (X)

Applicable models	
Quartz with 2-wire inductive solid state QN_X_, QX_X_	
Specifications	
Configuration	(2) SST solid state sensors
Operation	NO/NC (cam selectable)
Maximum current	Inrush 1.0 amp @ 125 VAC/VDC Continuous 0.1 amp @ 125 VAC/VDC
Minimum on current	0.5 mA (VAC/VDC)
Voltage range	24 - 125 VAC 50/60 Hz; 8 - 125 VDC
Maximum voltage drop	6.5 volts @ 10 mA 7.5 volts @ 100 mA
Leakage current	AC circuits 0.25 mA DC circuits 0.15 mA
LED indication	Bottom sensor: red Top sensor: green
Temperature range	-40° to 80° C
Operating life	Unlimited
Warranty	
All mechanical parts	Two years
Sensor module	Five years

WARNING

Failure to use a series load resistor when bench testing sensors with a power supply will result in permanent damage to the unit.

Bench test procedure

Use StoneL Light Read Tester. Or use a 24 VDC or 120 VAC power supply with series load resistor (2kΩ - 6kΩ).

Wiring diagrams

2 SST sensors (QN2X, QX2X)

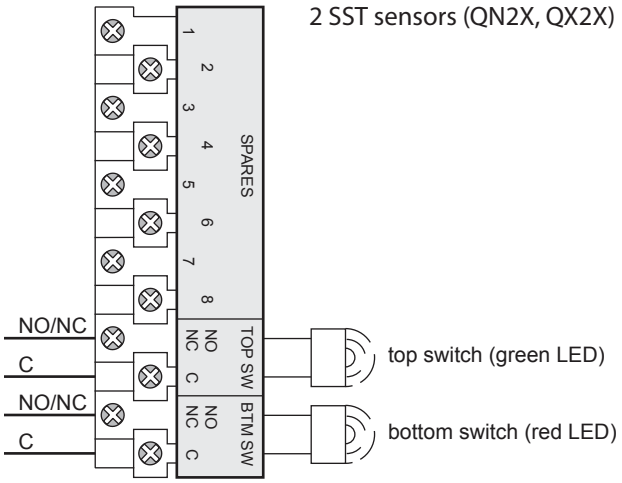

4 SST sensors (QN2X, QX2X)

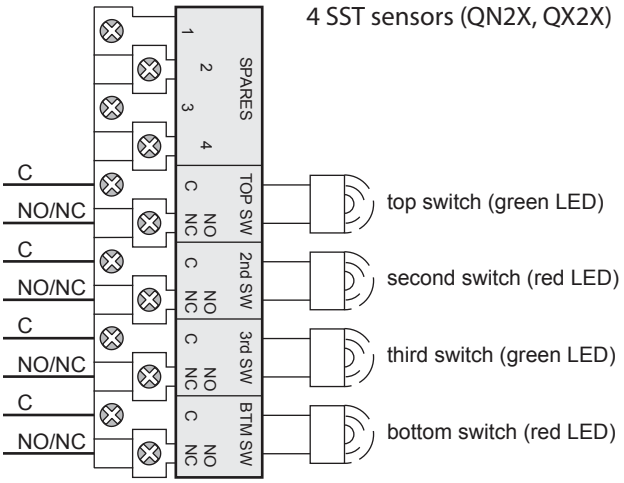

6 SST sensors (QN6X, QX6X)

Unit has 2 vertically mounted 12-pole terminal blocks

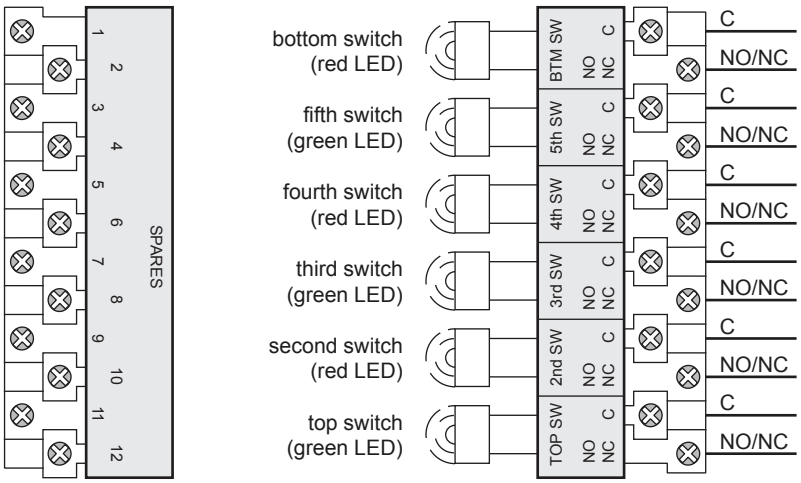

4.1.3 SST solid state proximity senors (X) continued

Touch & Tune switch setting

All adjustments assume you are looking down on the top of the sensors. The edge of the cam metal strip will be at the edge of the sensor target when activation occurs. When the cam is released be sure it slides fully onto the spline. One spline tooth setting is 4 ½°.

For normally open function (Fig. 1)

1. With the valve in the closed position and if the valve turns counterclockwise to open, set both cams so that the metal activation strips are 180° from each other with the bottom cam set in the middle of the sensor target.
2. Lift the bottom cam and turn counterclockwise until the red LED goes out then clockwise again until the red LED is lit. (Reverse the direction of the cam if the valve opens clockwise.)
3. Move the valve to the opposite position (open), push down on the top cam and rotate counterclockwise until the green LED is lit. (Reverse the direction of the cam if the valve opens clockwise.)

For the normally open operation, both LEDs will be off during the actuation period. If the optional green CLOSED visual indicator is used, the colors would be reversed in steps 1 and 2.

For normally closed function (Fig. 2)

1. With the valve in the closed position, set both cams so that the metal activation strips are aligned with each other and set in the middle of the sensor targets.
2. If the valve turns counterclockwise to open, pull up on the bottom cam and rotate clockwise until the red LED goes out. (If the valve turns clockwise to open, rotate bottom cam counterclockwise until it goes out.)
3. Operate the valve to the opposite position (open). Push down on the top cam. If the green LED is off, rotate top cam clockwise until it is lit. When the green LED is lit, turn cam counterclockwise until the green LED goes off.

For the normally closed operation, both the red and green LEDs will be illuminated during the actuation period. The red LED is off in the closed position and the green LED is off in the open position. If the optional green CLOSED visual indicator is used the colors would be reversed in steps 1 and 2.

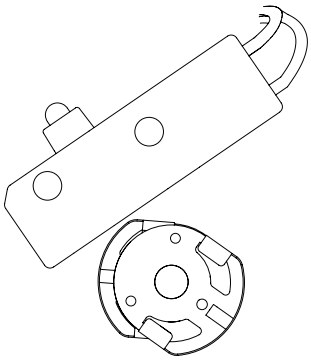

Fig. 1 cam set for normally open sensor function

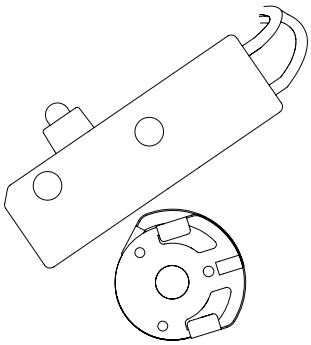

Fig. 2 cam set for normally closed sensor function

Caution: To prevent ignition of hazardous atmospheres, replace cover before energizing the electrical circuits. Keep cover tightly closed within operation.

4.1 Inductive proximity sensors

4.1.4 P+F 3-wire solid state proximity sensors (E, F)

Applicable models	
3- Wire NPN sinking sensor QN_E_, QX_E_ 3- Wire PNP sourcing sensor QN_F_, QX_F_	
Specifications	
Configuration	(2) 3-wire DC solid state sensors
Operation	NO/NC (cam selectable)
Maximum current	100 mA
Voltage range	10-30 VDC
Maximum voltage drop	<2.0 VDC
Current consumption	<15 mA
Temperature range	-40° to 80° C
Operating life	Unlimited
Warranty	Two years

WARNING

Failure to use a series load resistor when bench testing sensors with a power supply will result in permanent damage to the unit.

Bench test procedure

Connect a load resistor of 3K Ω to 10K Ω across a switch's load and (+) terminals (QN2E, QX2E), or a switch's load and (-) terminals (QN2F, QX2F). Using a 24 VDC power source, connect the power source (+) lead to a switch's (+) terminal and the power source (-) lead to a switch's (-) terminal. Connect a voltmeter across the load resistor. Apply 24 VDC. With cam activation strip in front of sensor target, the voltmeter will read >20 VDC. Activation strip away from sensor target voltmeter will read 0 VDC.

Wiring diagrams

(2) 3-wire sensors (QN2E_, QN2F_, QX2E_, QX2F_)

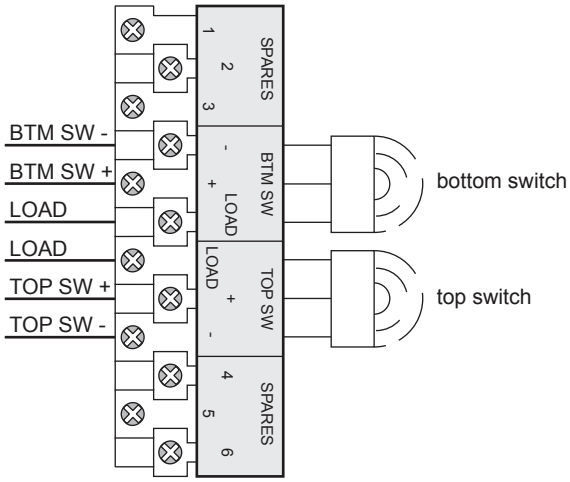

(4) 3-wire sensors (QN4E_, QN4F_, QX4E_, QX4F_)

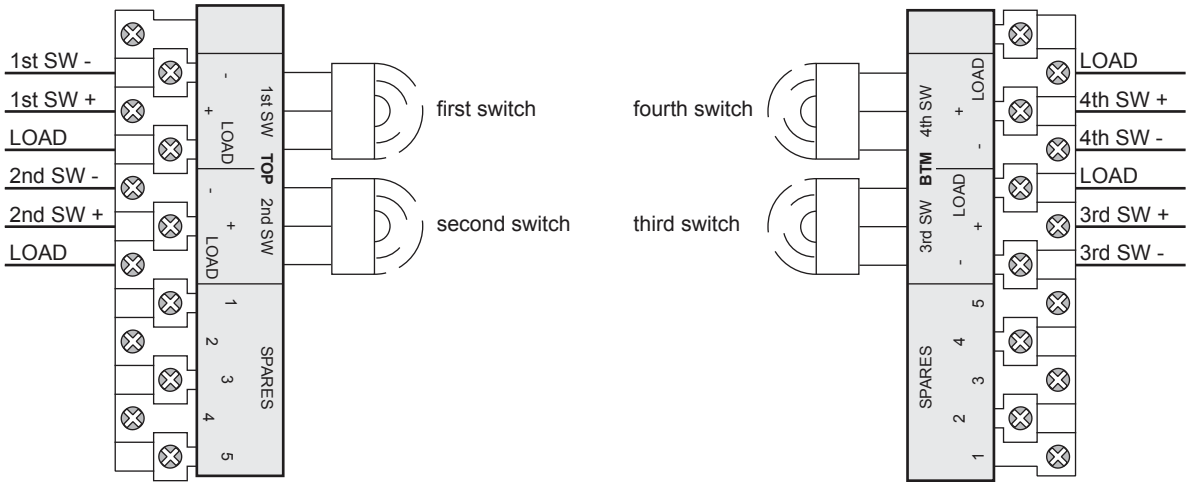

4.1.4 P+F 3-wire solid state proximity sensors (E, F) continued

Touch & Tune switch setting

All adjustments assume you are looking down on the top of the sensors. The edge of the cam metal strip will be at the edge of the sensor target when activation occurs. When the cam is released be sure it slides fully onto the spline. One spline tooth setting is 4 ½°.

For normally open function (Fig. 1)

1. With the valve in the closed position and if the valve turns counterclockwise to open, set both cams so that the metal activation strips are 180° from each other with the bottom cam set in the middle of the sensor target. Connect test equipment to bottom switch as per Bench Test Procedure.
2. Lift the bottom cam and turn counterclockwise until the voltmeter reads 0 VDC then clockwise again until the voltmeter just reads >20 VDC. (Reverse the direction of the cam if the valve opens clockwise.)
3. Move the valve to the opposite position (open), connect test equipment to top switch. Push down on the top cam and rotate counterclockwise until the voltmeter just reads >20 VDC. (Reverse the direction of the cam if the valve opens clockwise.)

For the normally open operation, both sensors will be off during the actuation period.

For normally closed function (Fig. 2)

1. With the valve in the closed position, set both cams so that the metal activation strips are aligned with each other and set in the middle of the sensor targets. Connect test equipment to bottom switch as per Bench Test Procedure.
2. If the valve turns counterclockwise to open, pull up on the bottom cam and rotate clockwise until the voltmeter just reads 0 VDC. (If the valve turns clockwise to open, rotate bottom cam counterclockwise until the voltmeter reads 0 VDC)
3. Operate the valve to the opposite position (open). Connect test equipment to top switch. Push down on the top cam. If the voltmeter reads 0 VDC, rotate top cam clockwise until it reads >20 VDC. With the voltmeter reading >20 VDC rotate cam counter-clockwise until the voltmeter just reads 0 VDC.

For the normally closed operation, both sensors will be activated during the actuation period.

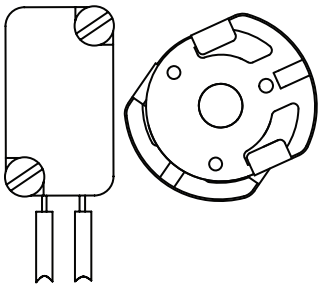

Fig. 1 cam set for normally open sensor function

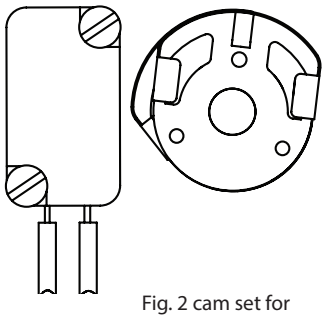

Fig. 2 cam set for normally closed sensor function

Caution: To prevent ignition of hazardous atmospheres, replace cover before energizing the electrical circuits. Keep cover tightly closed within operation.

4.2 Intrinsically safe inductive proximity switches

4.2.1 Dual module NAMUR sensors (44)

Applicable models		
QN44_, QX44_		
Specifications		
Configuration	(2) NAMUR sensors (EN 60947-5-6) Wire terminals for one or two solenoids	
Operation	NO/NC (cam selectable)	
Voltage range	5 -25 VDC	
Current ratings	Target present Target absent	Current < 1.0 mA (LED = OFF) Current > 3.0 mA (LED = ON)
LED indication	Bottom sensor: green Top sensor: red	
Temperature range	-40° to 80° C	
Operating life	Unlimited	
Warranty		
All mechanical parts	Two years	
Sensor module	Five years	
Use with intrinsically safe repeater barrier. NAMUR sensors conform to EN 60947-5-6 standard.		

Wiring diagram

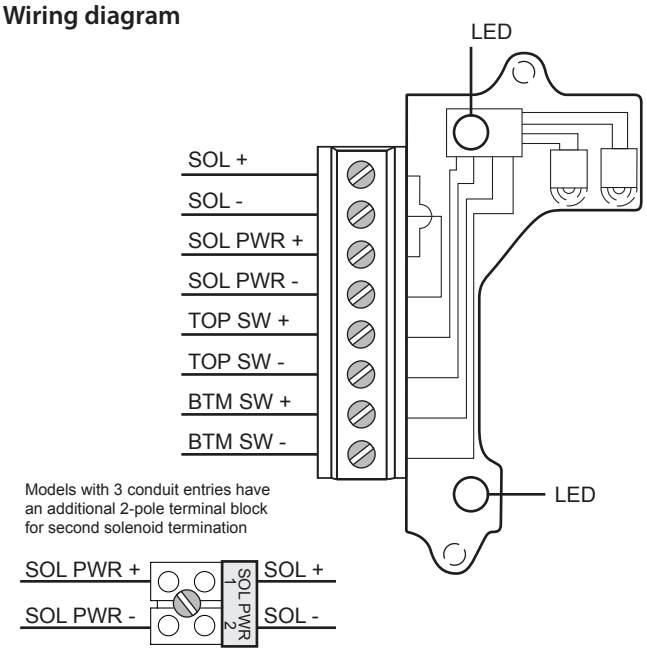

Bench test procedure

Use StoneL Light Read Tester or use a 24 VDC power supply. No series load resistor required.

Caution: To prevent ignition of hazardous atmospheres, replace cover before energizing the electrical circuits. Keep cover tightly closed within operation.

STOP Reference controlled installation drawing #105193 for proper intrinsic safety installation details. Find document in the Appendix on page 54 or at www.stonel.com/en/products/quartz/installation-manuals

Touch & Tune switch setting

All adjustments assume you are looking down on the top of the sensors. The edge of the cam metal strip will be at the edge of the sensor target when activation occurs. When the cam is released be sure it slides fully onto the spline. One spline tooth setting is 4 ½°.

Valve closed to open in counterclockwise rotation (Fig. 1)

1. With the valve in the closed position, set the bottom cam so that the metal activation strip is centered on the bottom sensor target and the top cam is 180° from the bottom cam.
2. Lift up bottom cam and rotate counterclockwise until the green LED is lit and remains lit when the cam is released, then rotate clockwise until the green LED goes off and remains out when the cam is released.
3. Move valve to the open position. Push down top cam and rotate counterclockwise until the red LED goes off. Release cam.

Valve closed to open in clockwise rotation (Fig. 2)

1. With the valve in the closed position, set the bottom cam so that the metal activation strip is centered on the bottom sensor target and the top cam is 180° from the bottom cam.
2. Lift up bottom cam and rotate clockwise until the green LED is lit and remains lit when the cam is released, then rotate counterclockwise until the green LED goes off and remains out when the cam is released.
3. Move valve to the open position. Push down top cam and rotate clockwise until the red LED goes off. Release cam.

Notes:

1. With the valve in the closed position, the red LED is lit and the bottom sensor is active (i.e. drawing less than 1.0 mA of current), while the top sensor is inactive (i.e.. drawing greater than 3.0 mA of current).
2. When the valve is in the open position, the green LED is lit and the top sensor is active while the bottom sensor is inactive.
3. During valve transition from closed to open or open to closed both LEDs will be lit and neither sensor will be active.

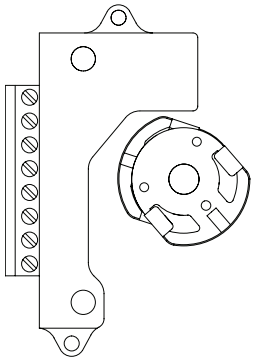

Fig. 1 cam set for normally open sensor function

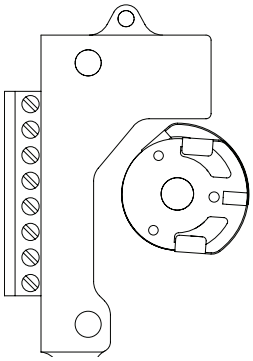

Fig. 2 cam set for normally closed sensor function

4.2 Intrinsically safe inductive proximity switches

4.2.2 Dual module NAMUR sensors (45)

Applicable models		
QC45_, QN45_, QX45_		
Specifications		
Configuration	(2) NAMUR sensors (EN 60947-5-6) Wire terminals for one or two solenoids	
Voltage range	5 - 25 VDC	
Current ratings	Target present Target absent	Current < 1.0 mA (LED = OFF) Current > 3.0 mA (LED = ON)
LED indication	Bottom sensor: green Top sensor: red	
Temperature range	-40° C to 80° C (-40° F to 176° F) *typical* -55° C to 80° C (-67° F to 176° F) *QC series only*	
Operating life	Unlimited	
Warranty		
All mechanical parts	Two years	
Sensor module	Five years	
Use with intrinsically safe repeater barrier. NAMUR sensors conform to EN 60947-5-6 standard.		

Wiring diagram

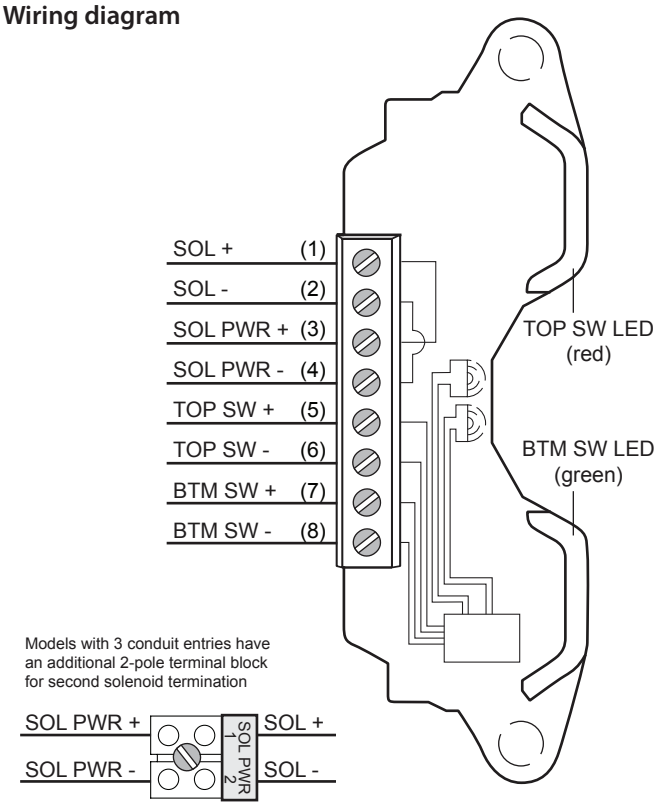

Bench test procedure

Use StoneL Light Read Tester or use a 24 VDC power supply. No series load resistor required.

Caution: To prevent ignition of hazardous atmospheres, replace cover before energizing the electrical circuits. Keep cover tightly closed within operation.

STOP Reference controlled installation drawing #105193 for proper intrinsic safety installation details. Find document in the Appendix on page 54 or at www.stonel.com/en/products/quartz/installation-manuals

Touch & Tune switch setting

All adjustments assume you are looking down on the top of the sensor module. The magnet in the cam will be centered on the sensor when activation occurs. When the cam is released be sure it slides fully onto the spline. One spline tooth setting is 4 ½°.

Valve closed to open in counterclockwise rotation (Fig. 1)

1. With the valve in the closed position, set the bottom cam by lifting up off the splined collar rotating so that the magnet is centered on the bottom sensor and the top cam is 90° from the bottom cam.
2. At this time the red LED will be lit and green LED out.
3. Move valve counterclockwise to the open position. Green LED will be lit and red LED will be out. If the red LED is lit, push down top cam and rotate until magnet in the top cam is centered on the top sensor and the red LED goes out. Cam adjustments are now completed.

Valve closed to open in clockwise rotation (Fig. 2)

1. With the valve in the closed position, set the bottom cam by lifting up off the splined collar rotating so that the magnet is centered on the bottom sensor and the top cam is 90° from the bottom cam.
2. At this time the red LED will be lit and green LED out.
3. Move valve clockwise to the open position. Green LED will be lit and red LED will be out. If the red LED is lit, push down top cam and rotate until magnet in the top cam is centered on the top sensor and the red LED goes out. Cam adjustments are now completed.

Notes

1. With the valve in the closed position, the red LED is lit and the bottom sensor is active (i.e. drawing less than 1.0 mA of current), while the top sensor is inactive (i.e. drawing greater than 3.0 mA of current).
2. When the valve is in the open position, the green LED is lit and the top sensor is active while the bottom sensor is inactive.
3. During valve transition from closed to open or open to closed both LEDs will be lit and neither sensor will be active.

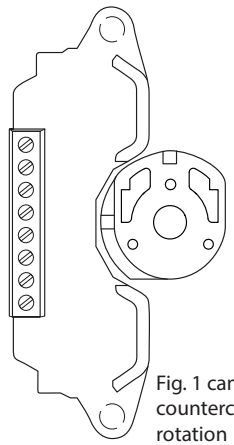

Fig. 1 cam set for counterclockwise rotation

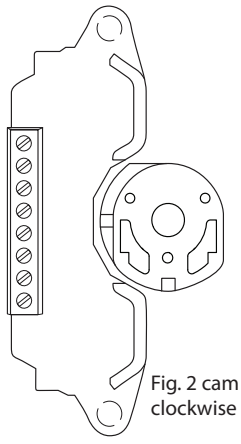

Fig. 2 cam set for clockwise rotation

4.2 Intrinsically safe inductive proximity switches

4.2.3 P+F NAMUR sensors NJ2-12GK-SN (A)

Applicable models		
QN_A_, QX_A_		
Specifications		
Configuration	(2) NAMUR sensors (EN 60947-5-6)	
Operation	NO/NC (cam selectable)	
Current ratings	Target present Target absent	Current < 1.0 mA Current > 3.0 mA
Voltage range	5 - 25 VDC	
Temperature range	-40° to 80° C	
Operating life	Unlimited	
Warranty	Two years	

Use with intrinsically safe repeater barrier. NAMUR sensors conform to EN 60947-5-6 standard.

Wiring diagrams

2 NAMUR sensors (QX2A, QN2A)

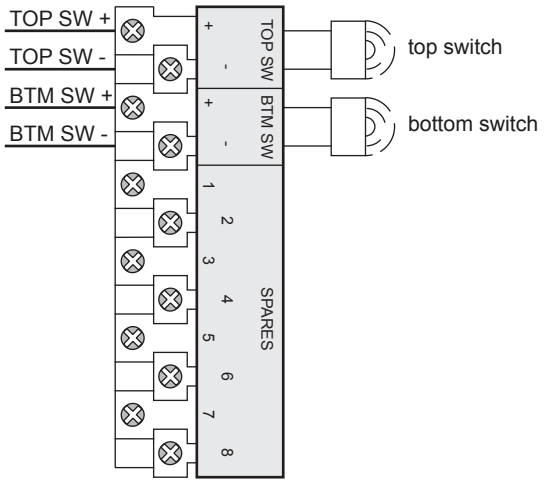

4 NAMUR sensors (QX4A, QN4A)

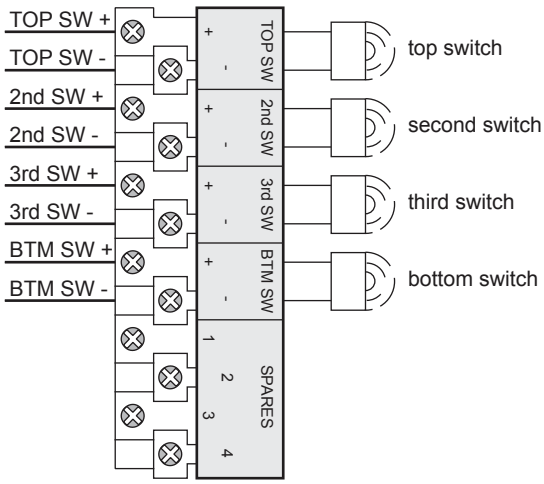

Bench test procedure

Use StoneL Light Read Tester or use a 24 VDC power supply and an ammeter. No series load resistor required.

Caution: To prevent ignition of hazardous atmospheres, replace cover before energizing the electrical circuits. Keep cover tightly closed within operation.

STOP Reference controlled installation drawing #105193 for proper intrinsic safety installation details. Find document in the Appendix on page 54 or at www.stonel.com/en/products/quartz/installation-manuals

Touch & Tune switch setting

All adjustments assume you are looking down on the top of the sensors. The edge of the cam metal strip will be at the edge of the sensor target when activation occurs. When the cam is released be sure it slides fully onto the spline. One spline tooth setting is 4 ½°.

Valve closed to open in counterclockwise rotation (Fig. 1)

1. With the valve in the closed position, set the bottom cam so that the metal activation strip is centered on the bottom sensor target and the top cam is 90° from the bottom cam. Connect power supply and ammeter to the bottom switch.
2. Lift up bottom cam and rotate counterclockwise until the ammeter reads > 3 mA, then rotate clockwise until the ammeter reads < 1 mA. Release the cam.
3. Move valve to the open position. Connect power supply and ammeter to the top switch. Push down top cam and rotate clockwise until the ammeter reads > 3 mA then counterclockwise until the ammeter reads < 1 mA. Release cam.

Valve closed to open in clockwise rotation (Fig. 2)

1. With the valve in the closed position, set the top cam so that the metal activation strip is centered on the bottom sensor target and the bottom cam is 90° from the top cam. Connect power supply and ammeter to the top switch.
2. Push down top cam and rotate clockwise until the ammeter reads > 3 mA, then rotate counterclockwise until the ammeter reads < 1 mA. Release the cam.
3. Move valve to the open position. Connect power supply and ammeter to the bottom switch. Lift up bottom cam and rotate clockwise until the ammeter reads > 3 mA, then rotate counterclockwise until the ammeter reads < 1 mA. Release the cam.

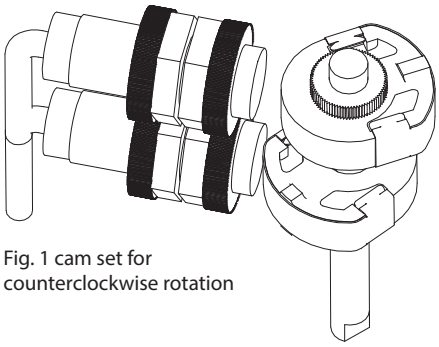

Fig. 1 cam set for counterclockwise rotation

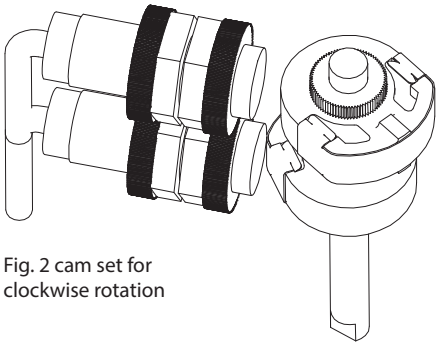

Fig. 2 cam set for clockwise rotation

4.2 Intrinsically safe inductive proximity switches

4.2.4 P+F NAMUR sensors NJ5-30GK-S1N (B)

Applicable models		
(QN_B_, QX_B_)		
Specifications		
Configuration	(2) NAMUR NO sensors (EN 60947-5-6)	
Operation	NO/NC (cam selectable)	
Current ratings	Target present Target absent	Current > 3.0 mA Current < 1.0 mA
Voltage range	5 - 25 VDC	
Temperature range	-25° to 80° C	
Operating life	Unlimited	
Warranty	Two years	
Use with intrinsically safe repeater barrier. NAMUR sensors conform to EN 60947-5-6 standard.		

Wiring diagrams

2 NAMUR NO sensors (QN2B, QX2B)

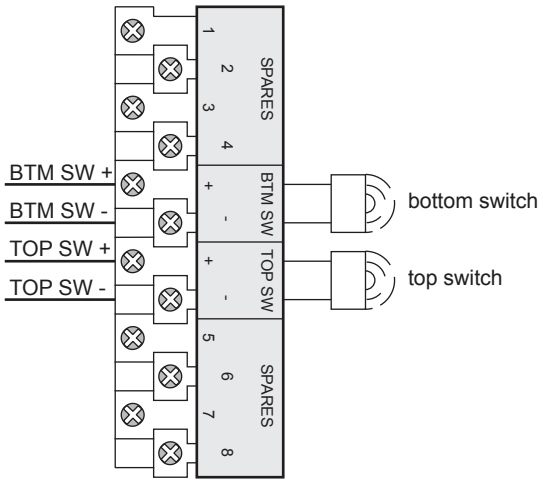

Bench test procedure

Use StoneL Light Read Tester or use a 24 VDC power supply and an ammeter. No series load resistor required.

Caution: To prevent ignition of hazardous atmospheres, replace cover before energizing the electrical circuits. Keep cover tightly closed within operation.

STOP Reference controlled installation drawing #105193 for proper intrinsic safety installation details. Find document in the Appendix on page 54 or at www.stonel.com/en/products/quartz/installation-manuals

Touch & Tune switch setting

All adjustments assume you are looking down on the top of the sensors. The edge of the metal cam will be approximately at the center of the sensor when activation occurs.

Valve closed to open in counterclockwise rotation (Fig. 1)

1. With the valve in the closed position, set the bottom cam so that it is centered on the bottom sensor and the top cam is 90° from the bottom cam. Connect power supply and ammeter to the bottom switch.
2. Rotate bottom cam counterclockwise until the ammeter reads > 3 mA, then rotate clockwise until the ammeter reads < 1 mA. Tighten set screw.
3. Move valve to the open position. Connect power supply and ammeter to the top switch. Rotate top cam clockwise until the ammeter reads > 3 mA then counterclockwise until the ammeter reads < 1 mA. Tighten set screw.

Valve closed to open in clockwise rotation (Fig. 2)

1. With the valve in the closed position, set the bottom cam so that it is centered on the bottom sensor and the top cam is 90° from the bottom cam. Connect power supply and ammeter to the bottom switch.
2. Rotate bottom cam counterclockwise until the ammeter reads > 3 mA, then rotate clockwise until the ammeter reads < 1 mA. Tighten set screw.
3. Move valve to the open position. Connect power supply and ammeter to the top switch. Rotate top cam clockwise until the ammeter reads > 3 mA then counterclockwise until the ammeter reads < 1 mA. Tighten set screw.

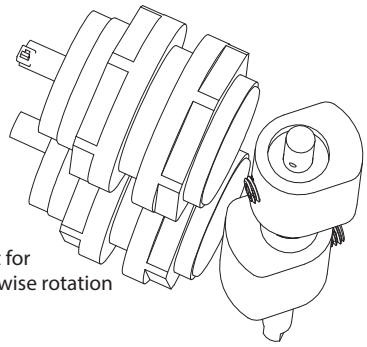

Fig. 1 cam set for counterclockwise rotation

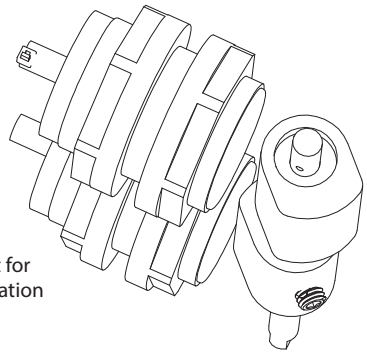

Fig. 2 cam set for clockwise rotation

4.2 Intrinsically safe inductive proximity switches

4.2.5 P+F NAMUR sensors NJ2-V3-N (N)

Applicable models		
(QN_N_, QX_N_)		
Specifications		
Configuration	(2) NAMUR sensors (EN 60947-5-6)	
Operation	NO/NC (cam selectable)	
Current ratings	Target present Target absent	Current < 1.0 mA (LED = OFF) Current > 3.0 mA (LED = ON)
Voltage range	5 - 25 VDC	
Temperature range	-25° to 80° C	
Operating life	Unlimited	
Warranty	Two years	
Use with intrinsically safe repeater barrier. NAMUR sensors conform to EN 60947-5-6 standard.		

Wiring diagrams

2 NAMUR sensors (QN2N, QX2N)

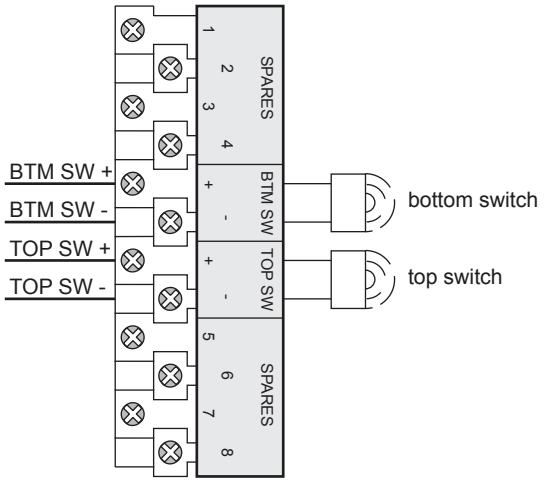

4 NAMUR sensors (QN4N, QX4N)

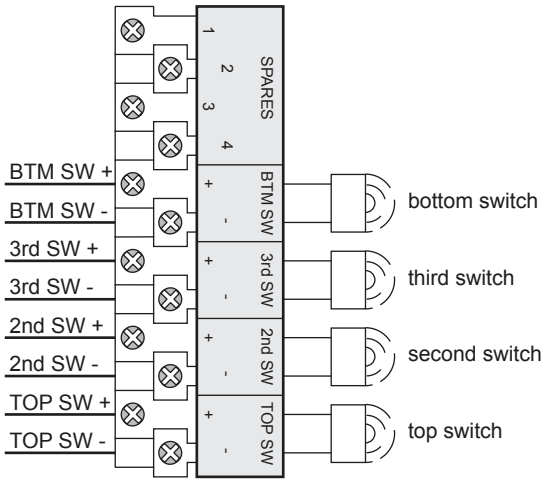

Bench test procedure

Use StoneL Light Read Tester or use a 24 VDC power supply and an ammeter. No series load resistor required.

STOP Reference controlled installation drawing #105193 for proper intrinsic safety installation details. Find document in the Appendix on page 54 or at www.stonel.com/en/products/quartz/installation-manuals

Touch & Tune switch setting

All adjustments assume you are looking down on the top of the sensors. The edge of the cam metal strip will be at the edge of the sensor target when activation occurs. When the cam is released be sure it slides fully onto the spline. One spline tooth setting is 4 ½°.

Valve closed to open in counterclockwise rotation (Fig. 1)

1. With the valve in the closed position, set the bottom cam so that the metal activation strip is centered on the bottom sensor target and the top cam is 180° from the bottom cam. Connect power supply and ammeter to the bottom switch.
2. Lift up bottom cam and rotate counterclockwise until the ammeter reads > 3 mA, then rotate clockwise until the ammeter reads < 1 mA. Release the cam.
3. Move valve to the open position. Connect power supply and ammeter to the top switch. Push down top cam and rotate counterclockwise until the ammeter reads < 1 mA. Release cam.

Valve closed to open in clockwise rotation (Fig. 2)

1. With the valve in the closed position, set the bottom cam so that the metal activation strip is centered on the bottom sensor target and the top cam is 180° from the bottom cam. Connect power supply and ammeter to the bottom switch.
2. Lift up bottom cam and rotate clockwise until the ammeter reads > 3 mA, then rotate counterclockwise until the ammeter reads < 1 mA. Release the cam.
3. Move valve to the open position. Connect power supply and ammeter to the top switch. Push down top cam and rotate counterclockwise until the ammeter reads < 1 mA. Release cam.

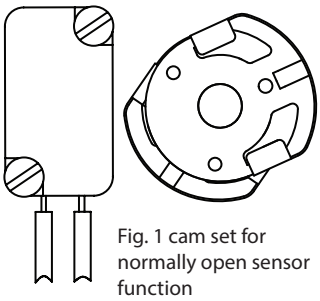

Fig. 1 cam set for normally open sensor function

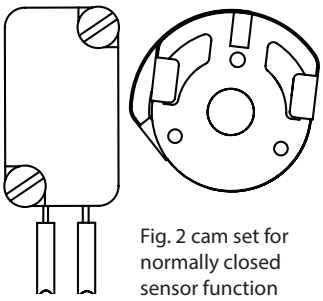

Fig. 2 cam set for normally closed sensor function

Caution: To prevent ignition of hazardous atmospheres, replace cover before energizing the electrical circuits. Keep cover tightly closed within operation.

4.3 Reed type proximity switches

4.3.1 SPST Maxx-Guard proximity sensors (L, P)

Applicable models		
(QN2P_, QX2P_, QN2L_, QX2L_, QN4P_, QX4P_, QN4L_, QX4L_)		
Specifications		
Configuration	SPST (NO)	
Contact material	Ruthenium	
Electrical ratings	0.15 amp @ 125 VAC 50/60 Hz; 30 VDC	
Maximum voltage drop	No LED (P)	0.1 volts @ 10 mA 0.5 volts @ 100 mA
	With LED (L)	3.5 volts @ 10 mA 6.5 volts @ 100 mA
Temperature range	-40° to 80° C	
Operating life	5 million cycles	
Seal	Hermetically sealed reed switches	
Warranty	Two years	

Wiring diagrams

2 SPST switches

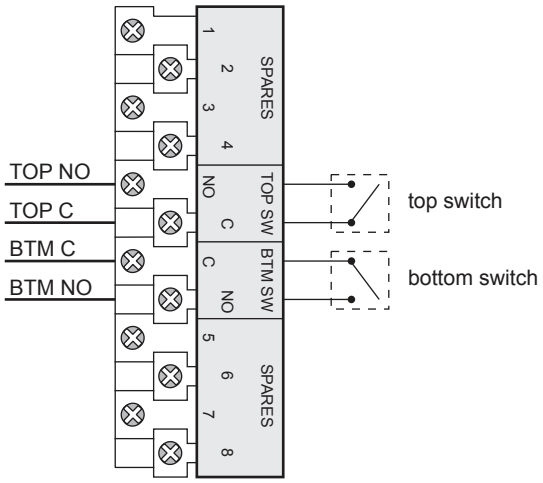

4 SPST switches

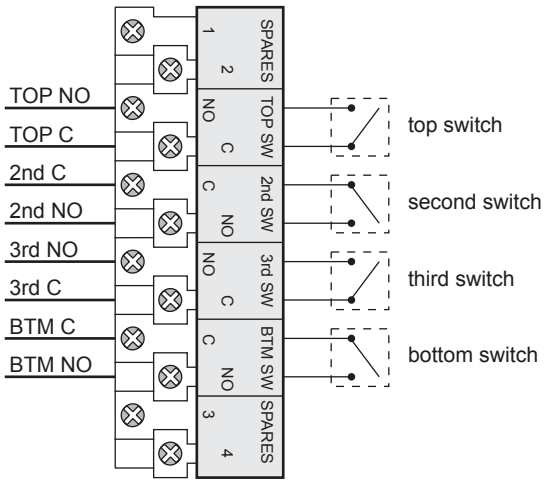

WARNING

Failure to use a series load resistor when bench testing sensors with a power supply will result in permanent damage to the unit.

Bench test procedure

Test LED units with 9 volt battery and series load resistor between 150 and 1000 ohms - ½ watt. Ohm meter will not work. (Light Read tester available from StoneL or StoneL distributor.)

Minimum of 3.5 volts required for proper switch operation.

Touch & Tune switch setting

1. Lift bottom cam and rotate until sensor is activated. (White highlight will be next to sensor.) Release cam and be sure it slides fully onto spline.
2. Operate actuator to opposite position, push down on top cam and repeat process.

Caution: To prevent ignition of hazardous atmospheres, replace cover before energizing the electrical circuits. Keep cover tightly closed within operation.

4.3 Reed type proximity switches

4.3.2 SPDT Maxx-Guard proximity sensors (G, H, S)

Applicable models		
(QN2G_, QX2G_, QN2H_, QX2H_, QN2S_, QX2S_, QN4G_, QX4G_, QN4H_, QX4H_, QN4S_, QX4S_)		
Specifications		
Configuration	SPDT	
Electrical ratings		
"G" sensors	0.20 amp @ 120 VAC 50/60 Hz; 0.30 amp @ 24 VDC	
"S" sensors	0.10 amp @ 120 VAC 50/60 Hz; 0.10 amp @ 24 VDC	
"H" sensors*	Vmax-240 volts; Imax-3 amps Wmax-100 watts; Wmin-2.0 watts	
Maximum voltage drop	No LED	0.1 volts @ 10 mA 0.5 volts @ 100 mA
	With LED	3.5 volts @ 10 mA 6.5 volts @ 100 mA
Contact material	Rhodium ("G" and "S" sensors) Tungsten (H sensor)*	
Temperature range	-40° to 80° C	
Operating life	5 million cycles	
Seal	Hermetically sealed reed switches	
Warranty	Two years	
** Not recommended for electrical circuits operating at less than 20 mA @ 24 VDC*		

WARNING

Failure to use a series load resistor when bench testing sensors with a power supply will result in permanent damage to the unit.

Bench test procedure

Test LED units with 9 volt battery and series load resistor between 150 and 1000 ohms - ½ watt. Ohm meter will not work. (Light Read tester available from StoneL or StoneL distributor.)

Minimum of 3.5 volts required for proper switch operation.

Touch & Tune switch setting

1. Lift bottom cam and rotate until sensor is activated. (White highlight will be next to sensor.) Release cam and be sure it slides fully onto spline.
2. Operate actuator to opposite position, push down on top cam and repeat process.

Caution: To prevent ignition of hazardous atmospheres, replace cover before energizing the electrical circuits. Keep cover tightly closed within operation.

Wiring diagrams

2 SPDT switches

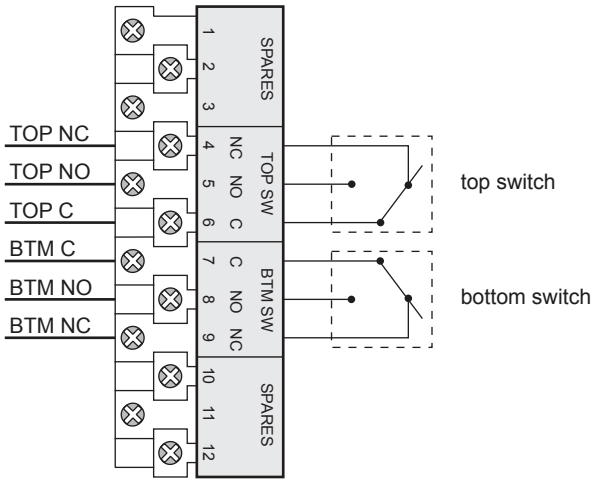

4 SPDT switches

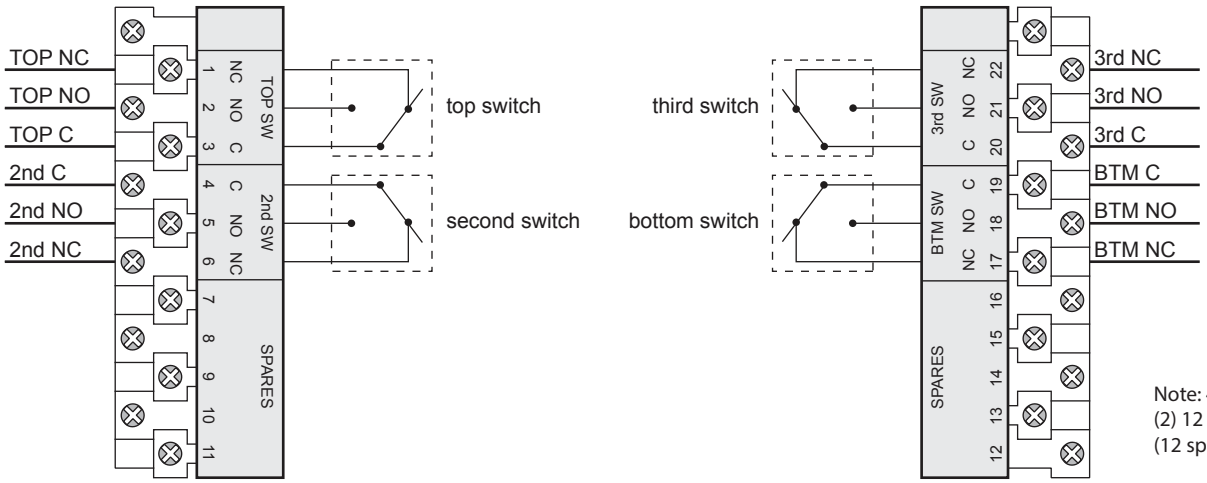

Note: 4 SPDT models have (2) 12 pole terminal block (12 spares)

4.3 Reed type proximity switches

4.3.3 Intrinsically safe models with SPST Maxx-Guard proximity sensors (J)

Applicable models	
QN_J	
Specifications	
Configuration	SPST (NO)
Electrical rating	0.1 amp @ 10-30 VDC
Maximum voltage drop	0.1 volts @ 10 mA 0.5 volts @ 100 mA
Contact material	Ruthenium
Temperature range	-40° to 80° C
Operating life	5 million cycles
Seal	Hermetically sealed reed switches
Warranty	Two years

STOP

Reference controlled installation drawing #105193 for proper intrinsic safety installation details. Find document in the Appendix on page 54 or at www.stonel.com/en/products/quartz/installation-manuals

Touch & Tune switch setting

1. Lift bottom cam and rotate until sensor is activated. (White highlight will be next to sensor.) Release cam and be sure it slides fully onto spline.
2. Operate actuator to opposite position, push down on top cam and repeat process.

Bench test procedure

Test sensors with a standard Ohm meter.

Minimum of 3.5 volts required for proper switch operation.

Wiring diagrams

2 SPST switches (QN2J_)

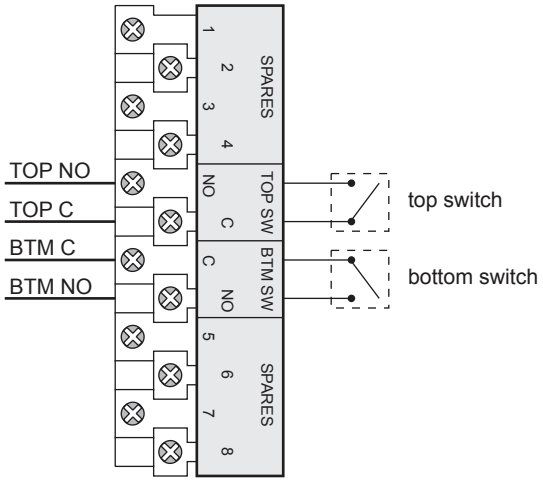

4 SPST switches (QN4J_)

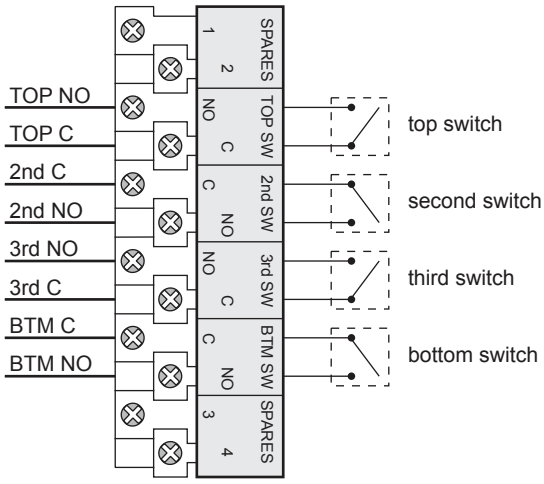

4.3 Reed type proximity switches

4.3.4 Intrinsically safe models with SPDT Maxx-Guard proximity sensors (M)

Applicable models	
QN_M	
Specifications	
Configuration	SPDT; passive (intrinsically safe)
Electrical rating	0.1 amp @ 10-30 VDC
Maximum voltage drop	0.1 volts @ 10 mA 0.5 volts @ 100 mA
Contact material	Rhodium
Temperature range	-40° to 80° C
Operating life	5 million cycles
Seal	Hermetically sealed reed switches
Warranty	Two years

STOP

Reference controlled installation drawing #105193 for proper intrinsic safety installation details. Find document in the Appendix on page 54 or at www.stonel.com/en/products/quartz/installation-manuals

Touch & Tune switch setting

1. Lift bottom cam and rotate until sensor is activated. (White highlight will be next to sensor.) Release cam and be sure it slides fully onto spline.
2. Operate actuator to opposite position, push down on top cam and repeat process.

Bench test procedure

Test sensors with a standard Ohm meter.

Minimum of 3.5 volts required for proper switch operation.

Wiring diagrams

2 SPDT switches (QN2M_)

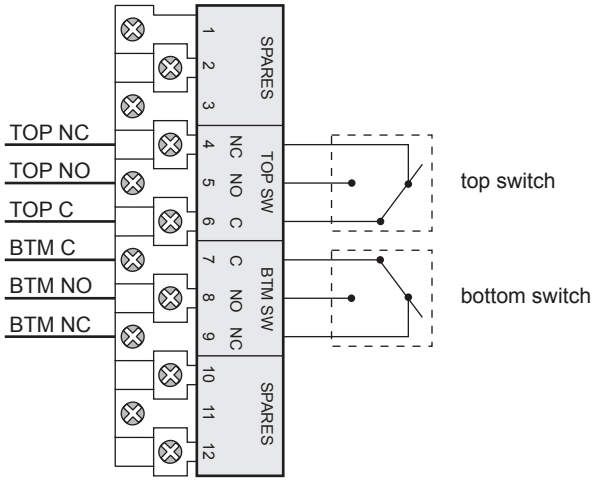

4 SPDT switches (QN4M_)

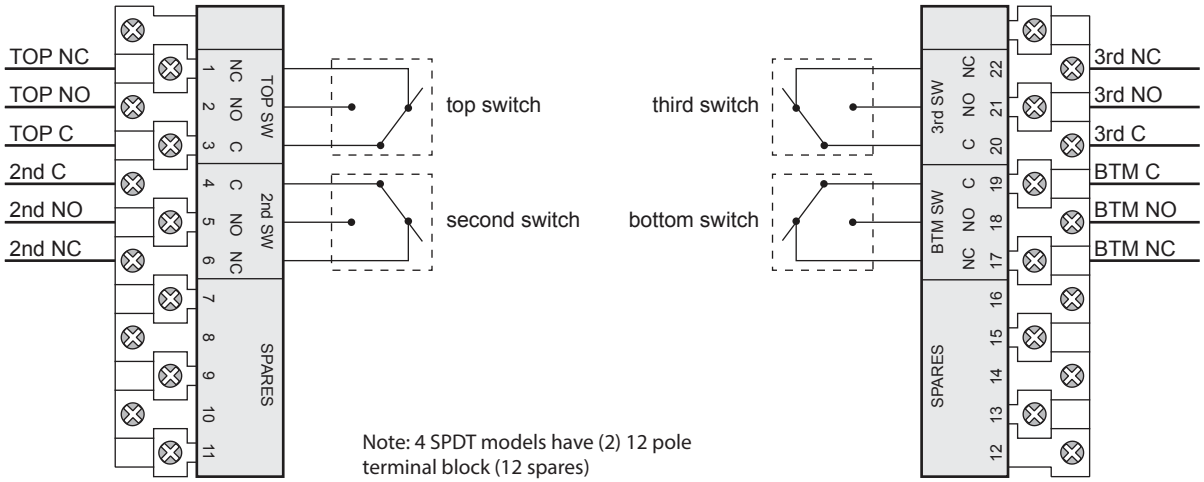

Note: 4 SPDT models have (2) 12 pole terminal block (12 spares)

4.4 Mechanical micro switches

4.4.1 Silver contacts (V) and gold contacts (W)

Applicable models for silver contacts (V)*	
QC2V_, QG2V_, QX2V_, QC4V_, QG4V_, QX4V_, QG6V_, QX6V_	
Specifications	
Electrical ratings	10.0 amp @ 125/250 VAC 50/60 Hz 0.5 amp @ 125 VDC
Temperature range	-40° C to 80° C (-40° F to 176° F) *typical* -55° C to 80° C (-67° F to 176° F) *QC series only*
Operating life	400,000 cycles
Warranty	Two years
** Not recommended for electrical circuits operating at less than 20 mA @ 24 VDC*	
Applicable models for gold contacts (W)**	
QC2W_, QG2W_, QX2W_, QC4W_, QG4W_, QX4W_, QG6W_, QX6W_	
Specifications	
Electrical ratings	1.0 amp @ 125 VAC 50/60 Hz 0.5 amp @ 30 VDC
Temperature range	-40° C to 80° C (-40° F to 176° F) *typical* -55° C to 80° C (-67° F to 176° F) *QC series only*
Operating life	100,000 cycles
Warranty	Two years
*** Recommended for use in 24 VDC computer input applications*	

Wiring diagrams

2 SPDT switches (QC2V_, QC2W_, QG2V_, QG2W_, QX2V_, QX2W_)

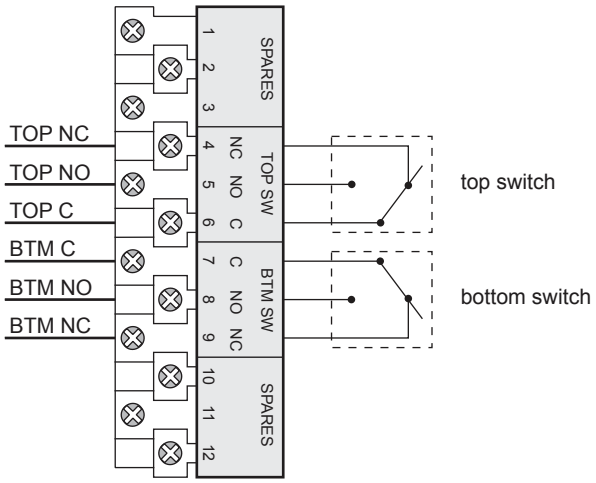

Touch & Tune switch setting

1. Lift bottom cam and rotate until sensor is activated. Release cam and be sure it slides fully onto spline.
2. Operate actuator to opposite position, push down on top cam and repeat process.

Caution: To prevent ignition of hazardous atmospheres, replace cover before energizing the electrical circuits. Keep cover tightly closed within operation.

4.4.1 Silver contacts (V) and gold contacts (W) continued

4 SPDT switches (QC4V_, QGCW_, QG4V_, QG4W_, QX4V_, QX4W_)

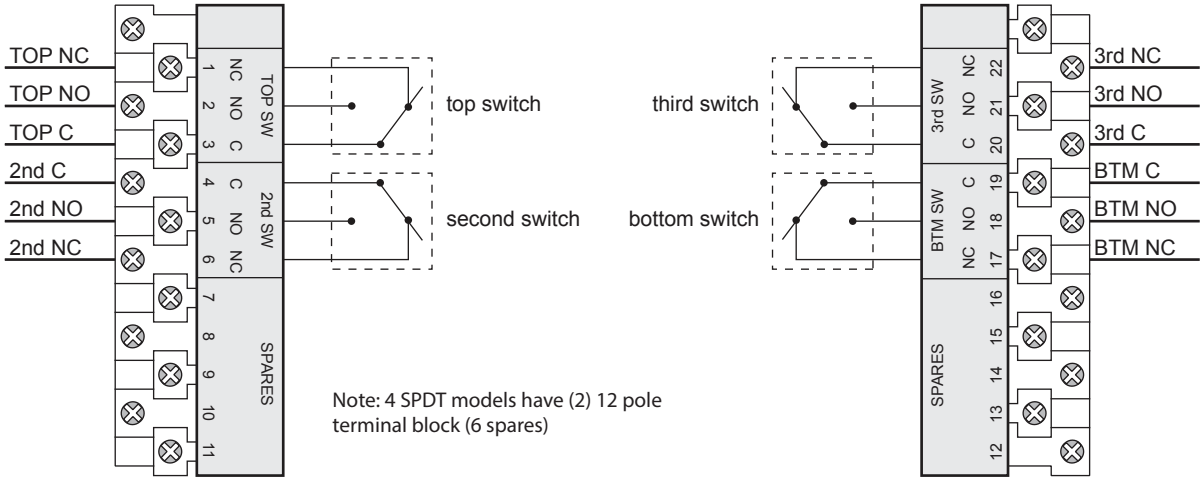

6 SPDT switches (QG6V_, QG6W_, QX6V_, QX6W_)

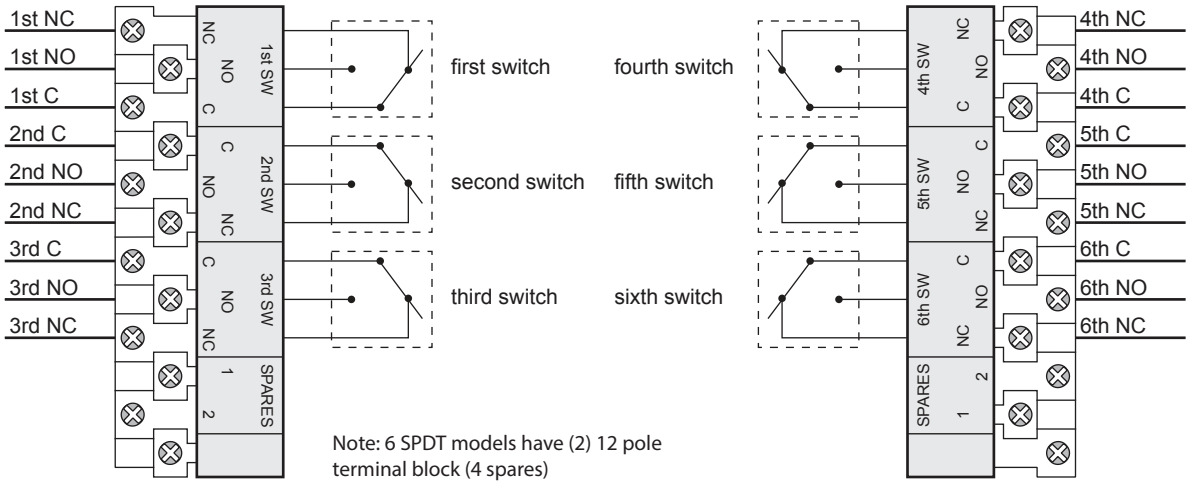

4.4 Mechanical micro switches

4.4.2 DPDT switches (14)

Applicable models	
QG14_, QX14_	
Specifications	
Electrical ratings	4.5 amp @ 125/250 VAC 50/60 Hz; 24 to 125 VDC
Temperature range	-40° to 80° C
Operating life	250,000 (VAC), 100,000 (VDC) cycles
Warranty	Two years
Not recommended for electrical circuits operating at less than 20 mA @ 24 VDC	

Wiring diagram

2 DPDT switches (QG14_, QX14_)

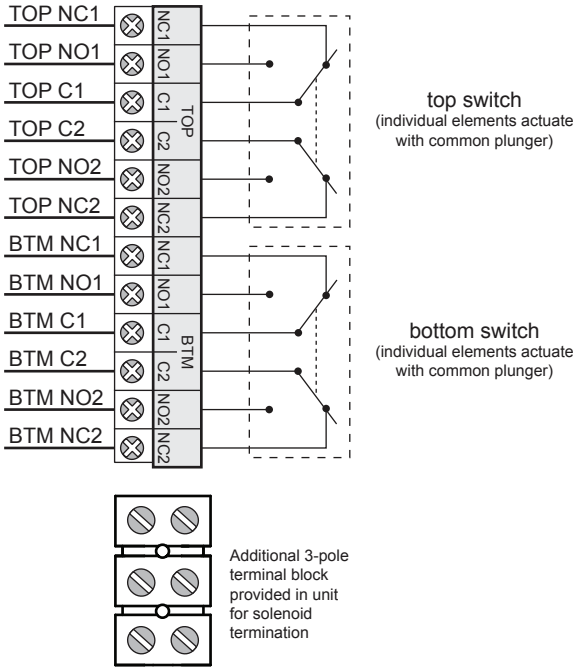

Touch & Tune switch setting

1. Lift bottom cam and rotate until sensor is activated. Release cam and be sure it slides fully onto spline.
2. Operate actuator to opposite position, push down on top cam and repeat process.

Caution: To prevent ignition of hazardous atmospheres, replace cover before energizing the electrical circuits. Keep cover tightly closed within operation.

4.5 Valve communication terminals (VCT)

4.5.1 VCT with DeviceNet™ communication (92)

Applicable models		
QN92_, QX92_		
Specifications		
Communication protocol	DeviceNet™	
Configuration	(2) Discrete Inputs (sensors) (2) Discrete Outputs (solenoids) (1) 4-20 mA auxiliary analog input, 10-bit resolution no additional power source required	
Voltage	24 VDC via DeviceNet™ network (11 - 25 VDC)	
Output voltage	24 VDC	
Quiescent current	32 mA @ 24 VDC, 48 mA @ 11 VDC	
Maximum output current	160 mA, both outputs combined	
Maximum output power	4 watts, both outputs combined	
Default address	63 (software assigned)	
Default baud rate	125K (software selectable 125K, 250K or 500K baud)	
Messaging	Polling, cyclic and change of state	
DeviceNet™ type	100	
Bit mapping	Inputs (3 bytes) Byte 0, bit 0 = red LED Byte 0, bit 1 = green LED Byte 0, bit 7 = fault bit Byte 1, bits 8-15 = analog input Byte 2, bits 16-23 = analog input	Outputs (1 byte) Byte 0, bit 0 = OUT 1 Byte 0, bit 1 = OUT 2 Byte 0, bit 2 = Wink Byte 0, bit 3 = not used Byte 0, bit 4 = not used
Warranty		
All mechanical parts	Two years	
Sensor module	Five years	

Wiring diagram

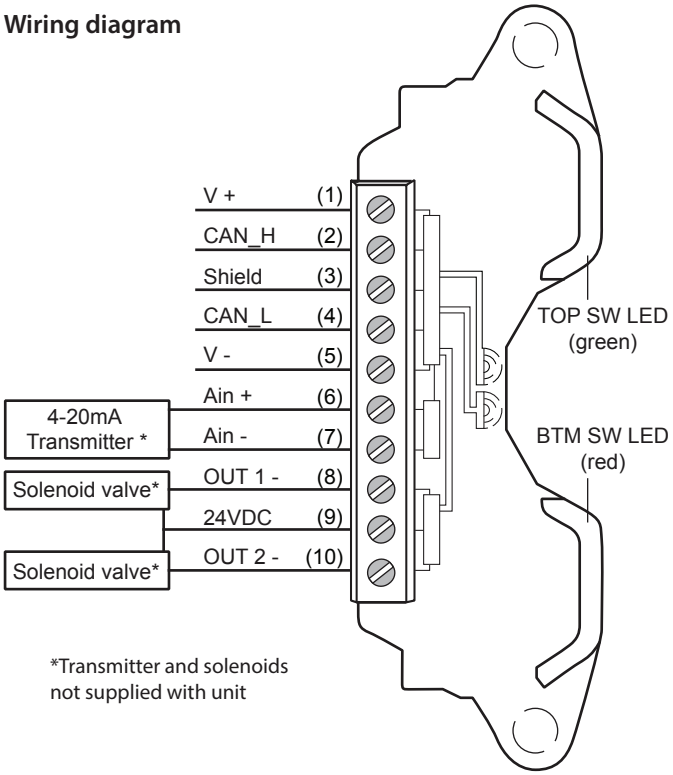

Caution: To prevent ignition of hazardous atmospheres, replace cover before energizing the electrical circuits. Keep cover tightly closed within operation.

WARNING
Do not apply external power to output terminals as this will damage the module.

Attention: Any external auxiliary device connected to the VCT module shall be ground isolated.

Bench test procedure

To bench test DeviceNet™ module: Use 24 VDC power supply across V + and V -. No series resistor needed. To test communication, a functioning DeviceNet™ network is required.

Touch & Tune switch setting

All adjustments assume you are looking down on the top of the sensor module. The magnet in the cam will be centered on the sensor when activation occurs. When the cam is released be sure it slides fully onto the spline. One spline tooth setting is 4 ½°.

Valve closed to open in counterclockwise rotation (Fig. 1)

1. With the valve in the closed position, set the bottom cam by lifting up off the splined collar rotating so that the magnet is centered on the bottom sensor and the top cam is 90° from the bottom cam. Top cam is adjusted by pushing down and rotating.
2. At this time the red LED will be lit and green LED out.
3. Move valve counterclockwise to the open position. Green LED will be lit and red LED will be out. Cam adjustments are now completed.

Valve closed to open in clockwise rotation (Fig. 2)

1. With the valve in the closed position, set the bottom cam by lifting up off the splined collar rotating so that the magnet is centered on the bottom sensor and the top cam is 90° from the bottom cam. Top cam is adjusted by pushing down and rotating.
2. At this time the red LED will be lit and green LED out.
3. Move valve clockwise to the open position. Green LED will be lit and red LED will be out. Cam adjustments are now completed.

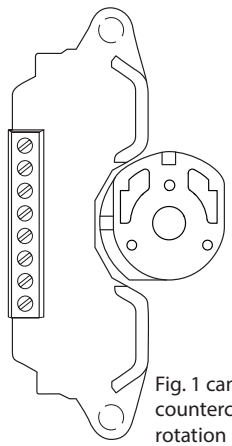

Fig. 1 cam set for counterclockwise rotation

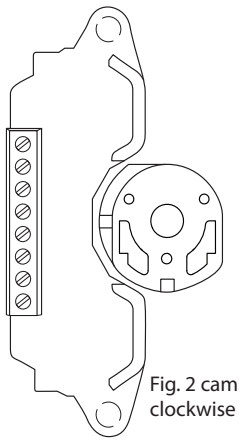

Fig. 2 cam set for clockwise rotation

Caution: To avoid damaging the module when performing the position switch calibration procedure, apply 24 VDC across V + and V -. Use the LEDs to determine when switches are made. You cannot do this procedure with an ohmmeter. No series load resistor is required when attaching a 24 VDC power supply for switch setting.

4.5.1 VCT with DeviceNet™ communication (92) continued

DeviceNet™ Wink feature

The Wink feature provides the capability of setting the CLOSED and OPEN LEDs to simultaneously flash or wink at a 2 Hz rate. This feature aids in physically locating the unit on the network.

1. DeviceNet™ communications are required in order to set the Wink feature. The unit must be addressed and correctly configured to be recognized by the control system.
2. Set byte 0, bit 2 to 1 in the desired unit. Once the correct unit has been physically located on the network, indicated by the winking of the CLOSED and OPEN LEDs, set byte 0 bit 2 back to 0. Performing this function will not change the closed and open sensor setpoints.

Quartz with DeviceNet™ Fault Bit (input byte 0, bit 7)

1. The Fault indication will set to a 1 when input byte 0, bits 0 and 1 are set to 1 at the same time.
2. When input byte 0, bits 0 and 1 are both set to 1, this would indicate that the valve is both open and closed at the same time. This would be an abnormal or Fault condition.

4.5 Valve communication terminals (VCT)

4.5.2 VCT with Foundation Fieldbus communication (93)

Applicable models		
QN93_, QX93_		
Specifications		
Communication protocol	Foundation Fieldbus (H1)	
Configuration	(2) Discrete Inputs, DI (open and closed) (2) Discrete Outputs, DO (solenoids) Multiple DI/DO blocks or modified output block for bus-powered discrete devices that operate at the ultra low power such as piezo solenoid valves and relays. Limited to 2.0 mA @ 6.5 VDC	
Function blocks	2 DI; 2 DO	
Voltage	9 - 32 VDC (bus voltage)	
Output voltage	6.5 VDC	
Quiescent current	16 mA	
Maximum output voltage	2.0 mA @ 6.5 VDC	
Current draw	16 mA	
Standard channel assignments		
Channel 1 (DI1)	Discrete Input 1 (red LED)	1 = true; 0 = false
Channel 2 (DI2)	Discrete Input 1 (green LED)	1 = true; 0 = false
Channel 3 (DO1)	Discrete Output 1 (OUT 1)	1 = true; 0 = false
Channel 4 (DO2)	Discrete Output 1 (OUT 2)	1 = true; 0 = false
Special channel assignments		
Channel 8 (DO1)	Discrete Output 1 (OUT 1) with state report from Discrete Input 1 (READBACK_D)	
Channel 9 (DO2)	Discrete Output 2 (OUT 2) with state report from Discrete Input 2 (READBACK_D)	
Valve control single block mode		
Channel 10 (DO1)	Discrete Output 1 (OUT 1) will state report Discrete Inputs 1&2 (READBACK_D)	
READBACK_D values	0 = None 1 = Discrete Input 1 is true 2 = Discrete Input 2 is true 3 = Both Discrete Inputs 1&2 are true	
Warranty		
All mechanical parts	Two years	
Sensor module	Five years	

Wiring diagram

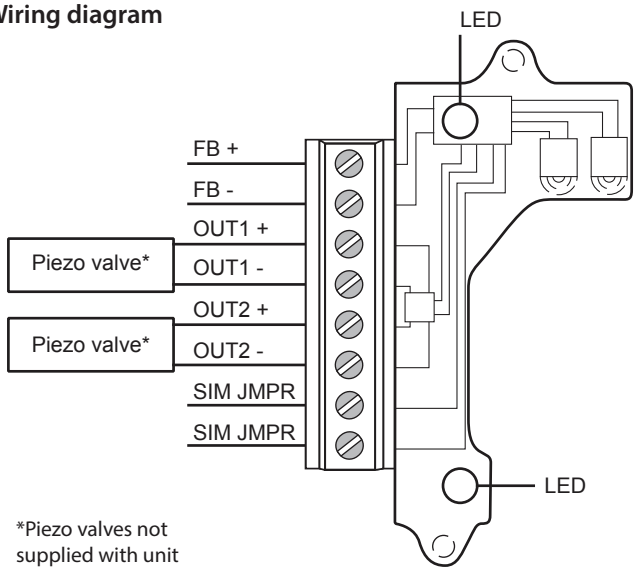

WARNING
Do not apply external power to output terminals as this will damage the module.

Bench test procedure

To bench test Foundation Fieldbus module: Use 9 - 32 VDC power supply across FB + and FB -. No series load resistor needed. To test communication, a functioning Foundation Fieldbus network is required.

Caution: To prevent ignition of hazardous atmospheres, replace cover before energizing the electrical circuits. Keep cover tightly closed within operation.

4.5.2 VCT with Foundation Fieldbus communication (93) continued

Touch & Tune switch setting

All adjustments assume you are looking down on the top of the sensors. The edge of the cam metal strip will be at the edge of the sensor target when activation occurs. When the cam is released be sure it slides fully onto the spline. One spline tooth setting is 4 ½°.

For normally open function (Fig. 1)

1. With the valve in the closed position and if the valve turns counterclockwise to open, set both cams so that the metal activation strips are 180° from each other with the bottom cam set in the middle of the sensor target.
2. Lift the bottom cam and turn counterclockwise until the red LED goes out then clockwise again until the red LED is lit. (Reverse the direction of the cam if the valve opens clockwise.)
3. Move the valve to the opposite position (open), push down on the top cam and rotate counterclockwise until the green LED is lit. (Reverse the direction of the cam if the valve opens clockwise.)

For the normally open operation, both LEDs will be off during the actuation period. If the optional green CLOSED visual indicator is used, the colors would be reversed in steps 1 and 2.

For normally closed function (Fig. 2)

1. With the valve in the closed position, set both cams so that the metal activation strips are aligned with each other and set in the middle of the sensor targets.
2. If the valve turns counterclockwise to open, pull up on the bottom cam and rotate clockwise until the red LED goes out. (If the valve turns clockwise to open, rotate bottom cam counterclockwise until it goes out.)
3. Operate the valve to the opposite position (open). Push down on the top cam. If the green LED is off, rotate top cam clockwise until it is lit. When the green LED is lit, turn cam counterclockwise until the green LED goes off.

For the normally closed operation, both the red and green LEDs will be illuminated during the actuation period. The red LED is off in the closed position and the green LED is off in the open position. If the optional green CLOSED visual indicator is used the colors would be reversed in steps 1 and 2.

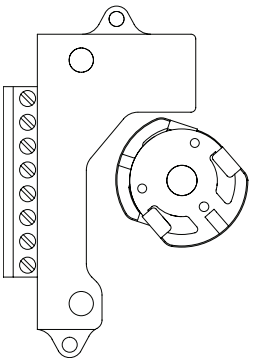

Fig. 1 cam set for normally open sensor function

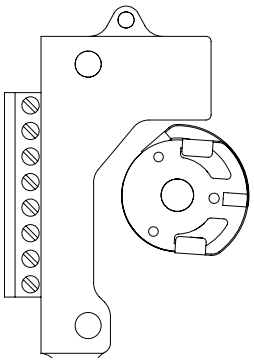

Fig. 2 cam set for normally closed sensor function

Caution: To avoid damaging the module when performing the position switch calibration procedure, apply 9 - 32 VDC across FB + and FB -. Use the LEDs to determine when switches are made. You cannot do this procedure with an ohmmeter. No series load resistor is required when attaching a 24 VDC power supply for switch setting.

4.5 Valve communication terminals (VCT)

4.5.3 VCT with AS- Interface communication (96 OLD STYLE)

Applicable models		
QN96_, QX96_		
Specifications		
Communication protocol	AS- Interface	
Configuration	(2) Discrete sensor Inputs (2) Auxiliary Discrete Inputs (2) Outputs (solenoids)	
Voltage	26.5 - 31.6 VDC (AS-i Voltage)	
Output voltage	24 VDC	
Quiescent current	21 mA	
Maximum output current	160 mA, both outputs combined	
Maximum output power	4 watts, both outputs combined	
Temperature range	-40° to 80° C	
ID/IO codes	ID = F; IO = 4; ID1 = F; ID2 = E (S-4.F.E.)	
Default address	00	
Bit assignment	Inputs Bit 1 = Aux Input 1 Bit 2 = Aux input 2 Bit 3 = green LED Bit 4 = red LED	Outputs Bit 1 = not used Bit 2 = not used Bit 3 = OUT 1 Bit 4 = OUT 2
Warranty		
All mechanical parts	Two years	
Sensor module	Five years	

Wiring diagram

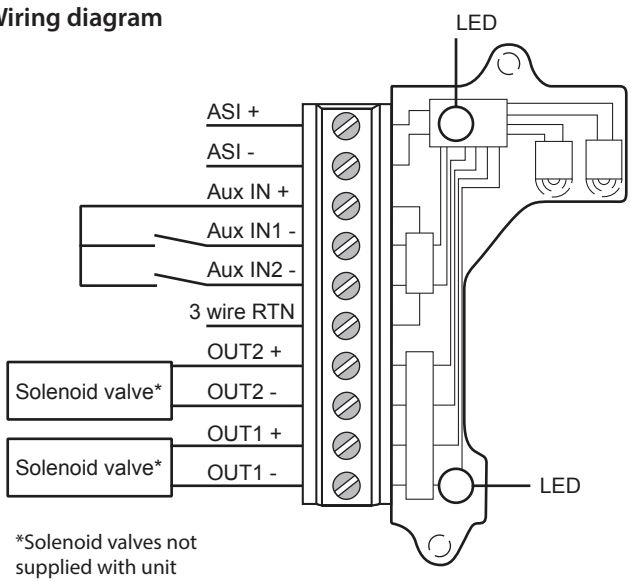

WARNING
Do not apply external power to output terminals as this will damage the module.

Bench test procedure

To bench test AS-Interface module: Use 24 VDC power supply across ASI + and ASI -. No series resistor needed. To test communication, a functioning AS-Interface network is required.

Caution: To prevent ignition of hazardous atmospheres, replace cover before energizing the electrical circuits. Keep cover tightly closed within operation.

Touch & Tune switch setting

All adjustments assume you are looking down on the top of the sensors. The edge of the cam metal strip will be at the edge of the sensor target when activation occurs. When the cam is released be sure it slides fully onto the spline. One spline tooth setting is 4 ½°.

For normally open function (Fig. 1)

1. With the valve in the closed position and if the valve turns counterclockwise to open, set both cams so that the metal activation strips are 180° from each other with the bottom cam set in the middle of the sensor target.
2. Lift the bottom cam and turn counterclockwise until the red LED goes out then clockwise again until the red LED is lit. (Reverse the direction of the cam if the valve opens clockwise.)
3. Move the valve to the opposite position (open), push down on the top cam and rotate counterclockwise until the green LED is lit. (Reverse the direction of the cam if the valve opens clockwise.)

For the normally open operation, both LEDs will be off during the actuation period. If the optional green CLOSED visual indicator is used, the colors would be reversed in steps 1 and 2.

For normally closed function (Fig. 2)

1. With the valve in the closed position, set both cams so that the metal activation strips are aligned with each other and set in the middle of the sensor targets.
2. If the valve turns counterclockwise to open, pull up on the bottom cam and rotate clockwise until the red LED goes out. (If the valve turns clockwise to open, rotate bottom cam counterclockwise until it goes out.)
3. Operate the valve to the opposite position (open). Push down on the top cam. If the green LED is off, rotate top cam clockwise until it is lit. When the green LED is lit, turn cam counterclockwise until the green LED goes off.

For the normally closed operation, both the red and green LEDs will be illuminated during the actuation period. The red LED is off in the closed position and the green LED is off in the open position. If the optional green CLOSED visual indicator is used the colors would be reversed in steps 1 and 2.

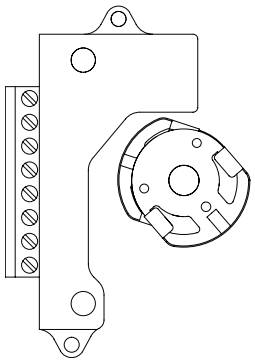

Fig. 1 cam set for normally open sensor function

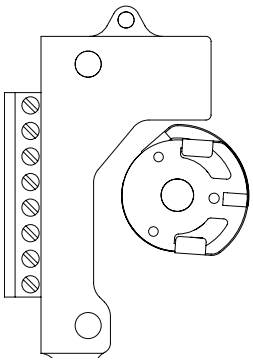

Fig. 2 cam set for normally closed sensor function

Caution: To avoid damaging the module when performing the position switch calibration procedure, apply 24 - 30 VDC across ASI + and ASI -. Use the LEDs to determine when switches are made. You cannot do this procedure with an ohmmeter. No series load resistor is required when attaching a 24 VDC power supply for switch setting.

4.5 Valve communication terminals (VCT)

4.5.4 VCT with AS- Interface communication (96 NEW STYLE)

Applicable models		
QN96_, QX96_		
Specifications		
Communication protocol	AS- Interface	
Configuration	(2) Discrete sensor Inputs (2) Auxiliary Discrete Inputs (2) Outputs (solenoids)	
Voltage	26.5 - 31.6 VDC (AS-i Voltage)	
Output voltage	24 VDC	
Quiescent current	15 mA	
Maximum output current	160 mA, both outputs combined	
Maximum output power	4 watts, both outputs combined	
Temperature range	-40° to 80° C	
ID/IO codes	ID = F; IO = 4; ID1 = F; ID2 = E (S-4.F.E.)	
Default address	00	
Bit assignment	Inputs Bit 1 = Aux Input 1 Bit 2 = Aux input 2 Bit 3 = green LED Bit 4 = red LED	Outputs Bit 1 = not used Bit 2 = not used Bit 3 = OUT 1 Bit 4 = OUT 2
Warranty		
All mechanical parts	Two years	
Sensor module	Five years	

Wiring diagram

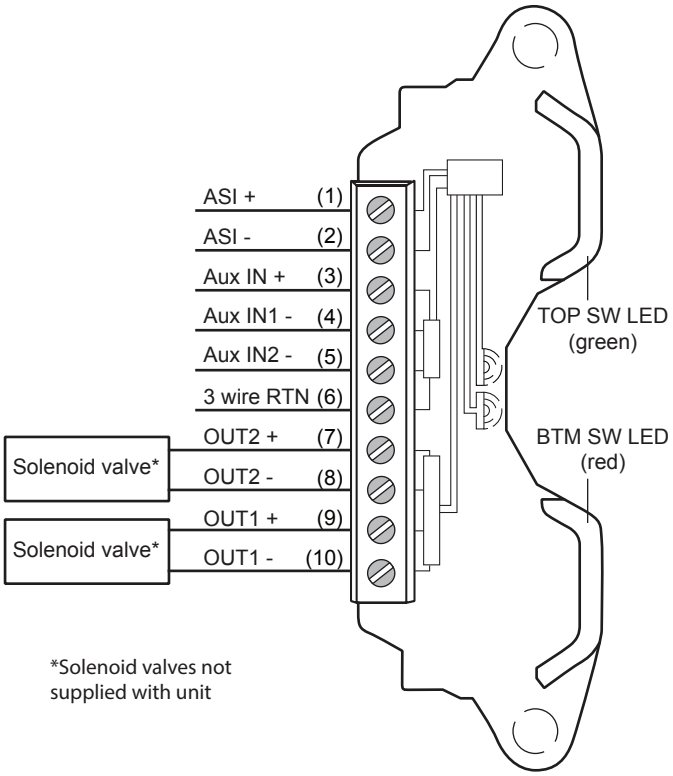

Caution: To prevent ignition of hazardous atmospheres, replace cover before energizing the electrical circuits. Keep cover tightly closed within operation.

WARNING
Do not apply external power to output terminals as this will damage the module.

Attention: Any external auxiliary device connected to the VCT module shall be ground isolated.

Bench test procedure

To bench test AS-Interface module: Use 24 VDC power supply across ASI + and ASI -. No series resistor needed. To test communication, a functioning AS-Interface network is required.

Touch & Tune switch setting

All adjustments assume you are looking down on the top of the sensor module. The magnet in the cam will be centered on the sensor when activation occurs. When the cam is released be sure it slides fully onto the spline. One spline tooth setting is 4 ½°.

Valve closed to open in counterclockwise rotation (Fig. 1)

1. With the valve in the closed position, set the bottom cam by lifting up off the splined collar rotating so that the magnet is centered on the bottom sensor and the top cam is 90° from the bottom cam. Top cam is adjusted by pushing down and rotating.
2. At this time the red LED will be lit and green LED out.
3. Move valve counterclockwise to the open position. Green LED will be lit and red LED will be out. Cam adjustments are now completed.

Valve closed to open in clockwise rotation (Fig. 2)

1. With the valve in the closed position, set the bottom cam by lifting up off the splined collar rotating so that the magnet is centered on the bottom sensor and the top cam is 90° from the bottom cam. Top cam is adjusted by pushing down and rotating.
2. At this time the red LED will be lit and green LED out.
3. Move valve clockwise to the open position. Green LED will be lit and red LED will be out. Cam adjustments are now completed.

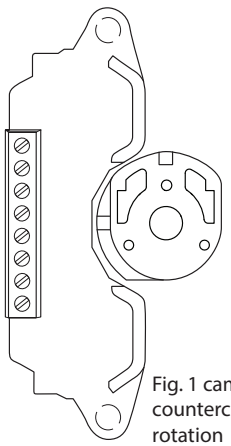

Fig. 1 cam set for counterclockwise rotation

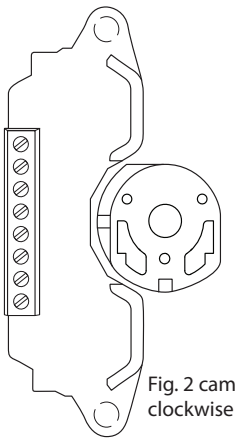

Fig. 2 cam set for clockwise rotation

Caution: To avoid damaging the module when performing the position switch calibration procedure, apply 24 - 30 VDC across V + and V -. Use the LEDs to determine when switches are made. You cannot do this procedure with an ohmmeter. No series load resistor is required when attaching a 24 VDC power supply for switch setting.

4.5 Valve communication terminals (VCT)

4.5.5 VCT with AS-Interface communication and extended addressing (97 OLD STYLE)

Applicable models		
QN97_, QX97_		
Specifications		
Communication protocol	AS- Interface with extended addressing	
Configuration	(2) Discrete sensor Inputs (2) Auxiliary Discrete Inputs (1) Output (solenoid)	
Voltage	26.5 - 31.6 VDC (AS-i Voltage)	
Output voltage	24 VDC	
Quiescent current	21 mA	
Maximum output current	100 mA	
Maximum output power	2.4 watts	
Temperature range	-40° to 80° C (-40° to 176° F)	
ID/IO codes	ID = A; IO = 4; ID1 = 7; ID2 = E (S-4.A.E.)	
Default address	0A	
Bit assignment	Inputs Bit 1 = Aux input 1 Bit 2 = Aux input 2 Bit 3 = green LED Bit 4 = red LED	Outputs Bit 1 = not used Bit 2 = not used Bit 3 = OUT 1 Bit 4 = not available
Warranty		
All mechanical parts	Two years	
Sensor module	Five years	

Wiring diagram

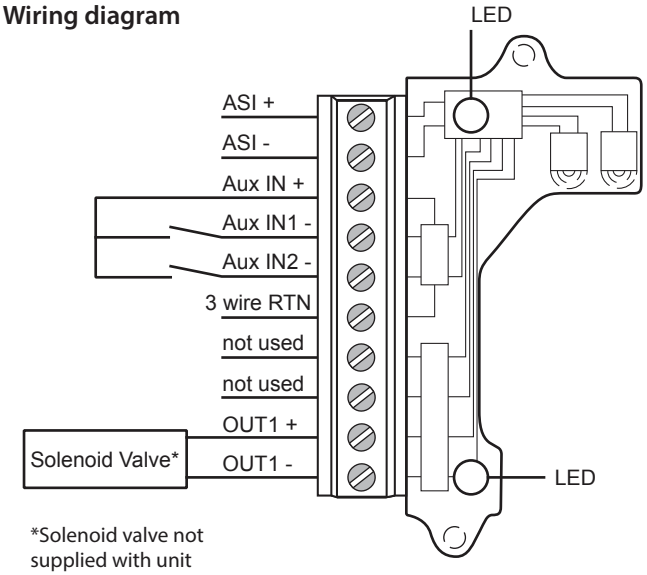

WARNING
Do not apply external power to output terminals as this will damage the module.

Bench test procedure

To bench test AS-Interface module: Use 24 VDC power supply across ASI + and ASI -. No series resistor needed. To test communication, a functioning AS-Interface network is required.

Caution: To prevent ignition of hazardous atmospheres, replace cover before energizing the electrical circuits. Keep cover tightly closed within operation.

Touch & Tune switch setting

All adjustments assume you are looking down on the top of the sensors. The edge of the cam metal strip will be at the edge of the sensor target when activation occurs. When the cam is released be sure it slides fully onto the spline. One spline tooth setting is 4 ½°.

For normally open function (Fig. 1)

1. With the valve in the closed position and if the valve turns counterclockwise to open, set both cams so that the metal activation strips are 180° from each other with the bottom cam set in the middle of the sensor target.
2. Lift the bottom cam and turn counterclockwise until the red LED goes out then clockwise again until the red LED is lit. (Reverse the direction of the cam if the valve opens clockwise.)
3. Move the valve to the opposite position (open), push down on the top cam and rotate counterclockwise until the green LED is lit. (Reverse the direction of the cam if the valve opens clockwise.)

For the normally open operation, both LEDs will be off during the actuation period. If the optional green CLOSED visual indicator is used, the colors would be reversed in steps 1 and 2.

For normally closed function (Fig. 2)

1. With the valve in the closed position, set both cams so that the metal activation strips are aligned with each other and set in the middle of the sensor targets.
2. If the valve turns counterclockwise to open, pull up on the bottom cam and rotate clockwise until the red LED goes out. (If the valve turns clockwise to open, rotate bottom cam counterclockwise until it goes out.)
3. Operate the valve to the opposite position (open). Push down on the top cam. If the green LED is off, rotate top cam clockwise until it is lit. When the green LED is lit, turn cam counterclockwise until the green LED goes off.

For the normally closed operation, both the red and green LEDs will be illuminated during the actuation period. The red LED is off in the closed position and the green LED is off in the open position. If the optional green CLOSED visual indicator is used the colors would be reversed in steps 1 and 2.

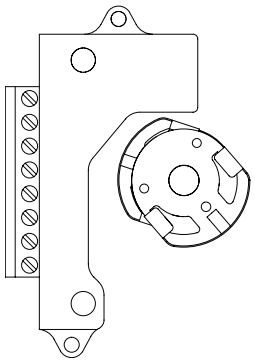

Fig. 1 cam set for normally open sensor function

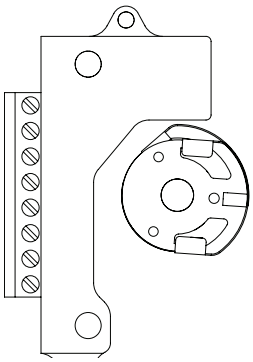

Fig. 2 cam set for normally closed sensor function

Caution: To avoid damaging the module when performing the position switch calibration procedure, apply 24 - 30 VDC across ASI + and ASI -. Use the LEDs to determine when switches are made. You cannot do this procedure with an ohmmeter. No series load resistor is required when attaching a 24 VDC power supply for switch setting.

4.5 Valve communication terminals (VCT)

4.5.6 VCT with AS-Interface communication and extended addressing (97 NEW STYLE)

Applicable models		
QN97_, QX97_		
Specifications		
Communication protocol	AS- Interface with extended addressing	
Configuration	(2) Discrete sensor Inputs (2) Auxiliary Discrete Inputs (1) Output (solenoid)	
Voltage	26.5 - 31.6 VDC (AS-i Voltage)	
Output voltage	24 VDC	
Quiescent current	15 mA	
Maximum output current	160 mA	
Maximum output power	4 watts	
Temperature range	-40° to 80° C (-40° to 176° F)	
ID/IO codes	ID = A; IO = 4; ID1 = 7; ID2 = E (S-4.A.E.)	
Default address	0A	
Bit assignment	Inputs Bit 1 = Aux input 1 Bit 2 = Aux input 2 Bit 3 = green LED Bit 4 = red LED	Outputs Bit 1 = not used Bit 2 = not used Bit 3 = OUT 1 Bit 4 = not available
Warranty		
All mechanical parts	Two years	
Sensor module	Five years	

Wiring diagram

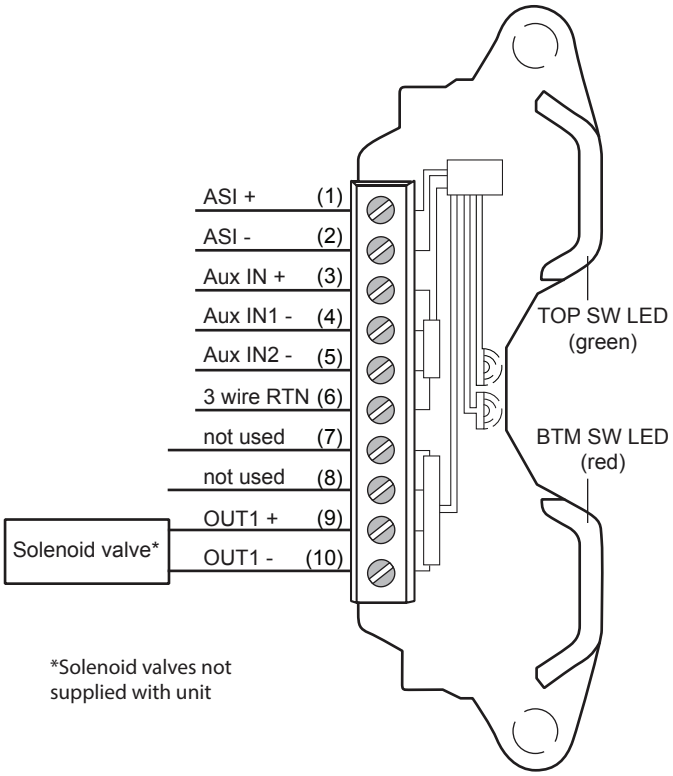

Caution: To prevent ignition of hazardous atmospheres, replace cover before energizing the electrical circuits. Keep cover tightly closed within operation.

WARNING
Do not apply external power to output terminals as this will damage the module.

Attention: Any external auxiliary device connected to the VCT module shall be ground isolated.

Bench test procedure

To bench test AS-Interface module: Use 24 VDC power supply across ASI + and ASI -. No series resistor needed. To test communication, a functioning AS-Interface network is required.

Touch & Tune switch setting

All adjustments assume you are looking down on the top of the sensor module. The magnet in the cam will be centered on the sensor when activation occurs. When the cam is released be sure it slides fully onto the spline. One spline tooth setting is 4 ½°.

Valve closed to open in counterclockwise rotation (Fig. 1)

1. With the valve in the closed position, set the bottom cam by lifting up off the splined collar rotating so that the magnet is centered on the bottom sensor and the top cam is 90° from the bottom cam. Top cam is adjusted by pushing down and rotating.
2. At this time the red LED will be lit and green LED out.
3. Move valve counterclockwise to the open position. Green LED will be lit and red LED will be out. Cam adjustments are now completed.

Valve closed to open in clockwise rotation (Fig. 2)

1. With the valve in the closed position, set the bottom cam by lifting up off the splined collar rotating so that the magnet is centered on the bottom sensor and the top cam is 90° from the bottom cam. Top cam is adjusted by pushing down and rotating.
2. At this time the red LED will be lit and green LED out.
3. Move valve clockwise to the open position. Green LED will be lit and red LED will be out. Cam adjustments are now completed.

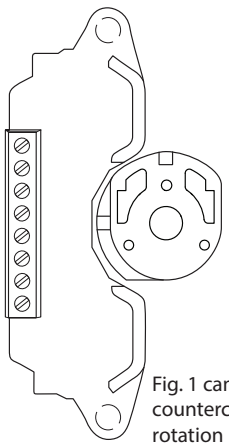

Fig. 1 cam set for counterclockwise rotation

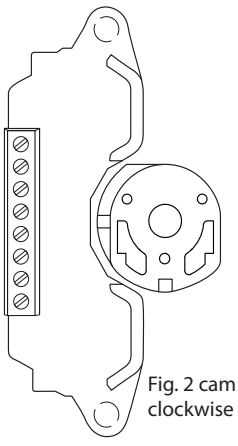

Fig. 2 cam set for clockwise rotation

Caution: To avoid damaging the module when performing the position switch calibration procedure, apply 24 - 30 VDC across V + and V -. Use the LEDs to determine when switches are made. You cannot do this procedure with an ohmmeter. No series load resistor is required when attaching a 24 VDC power supply for switch setting.

4.6 Position transmitters and potentiometers

4.6.1 4 to 20 mA position transmitters with and without switches (Type 5_, 7_)

Applicable models	
Standard potentiometer QN5_, QX5_ High performance potentiometer QN7_, QX7_	
Specifications	
Output	2-wire 4-20 mA
Voltage range	10 - 40 VDC
Recommended voltage	24 VDC, 50 mA minimum
Maximum load	700 ohm @ 24 VDC (see load curve)
Span	Adjustable from 35° to 270°
Maximum linearity error	Standard potentiometer (5) ± 0.85° High performance potentiometer (7) ± 0.35°
Temperature range	-40° to 80° C
Warranty	Two years

STOP

Reference controlled installation drawing #105193 for proper intrinsic safety installation details. Find document in the Appendix on page 54 or at www.stonel.com/en/products/quartz/installation-manuals

Caution: To prevent ignition of hazardous atmospheres, replace cover before energizing the electrical circuits. Keep cover tightly closed within operation.

Wiring diagrams

Transmitter only

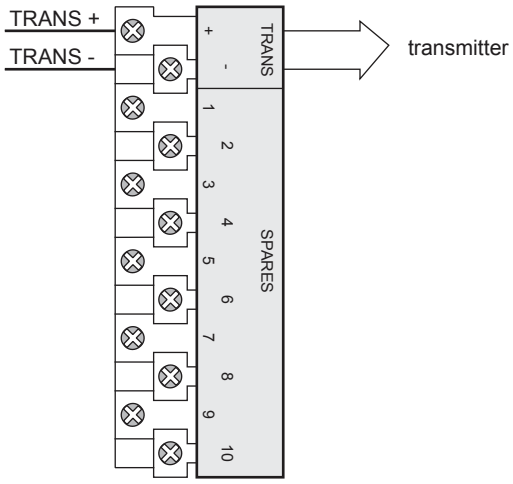

Transmitter with SPDT switches

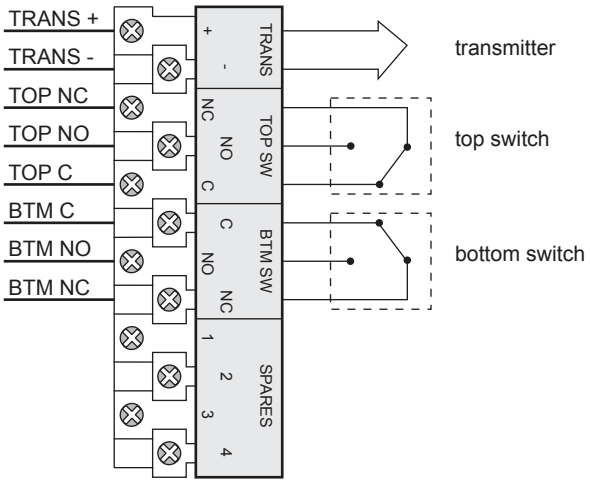

Transmitter with SPST switches

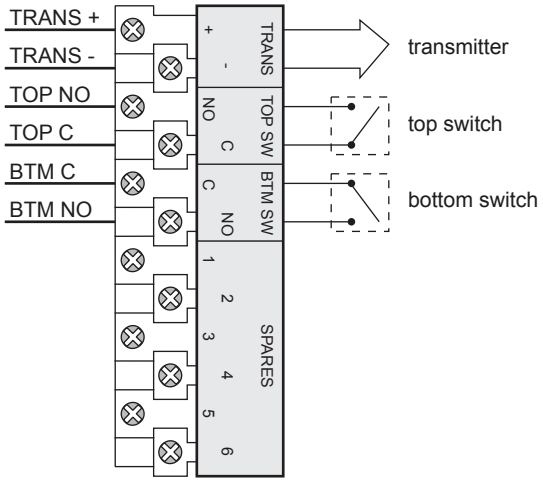

Transmitter with solid state switches

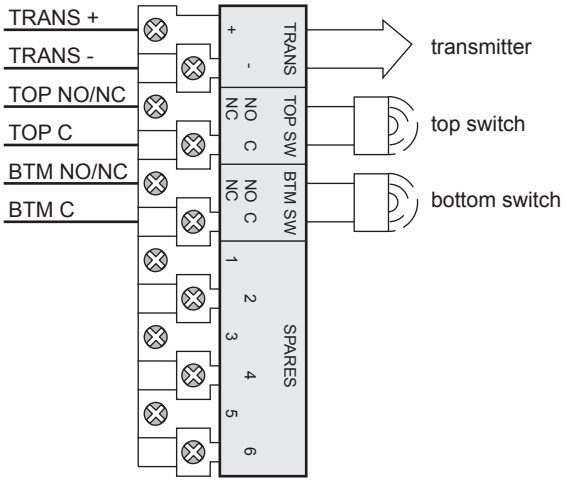

4.6.1 4 to 20 mA position transmitters with and without switches (Type 5_, 7_) continued

Transmitter with (33) VCT's (Q_53_, Q_73_)

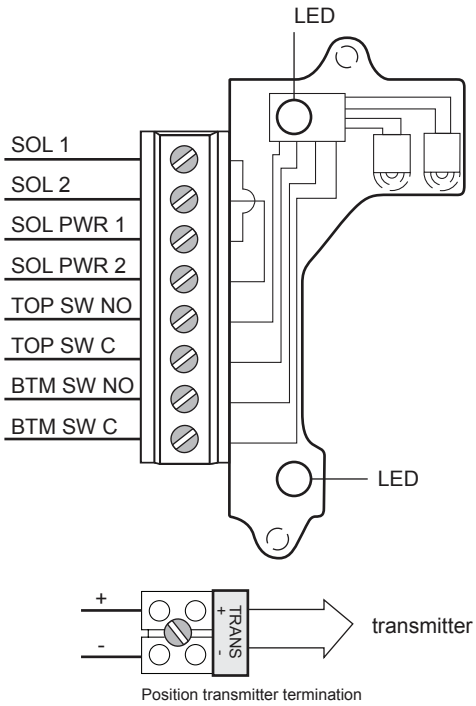

Transmitter with (44) VCT's (Q_54_, Q_74_)

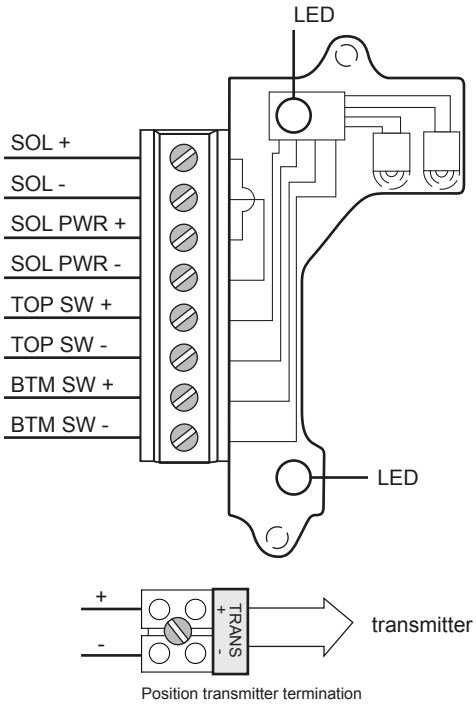

Transmitter with (35) VCT's (Q_5T_, Q_7T_)

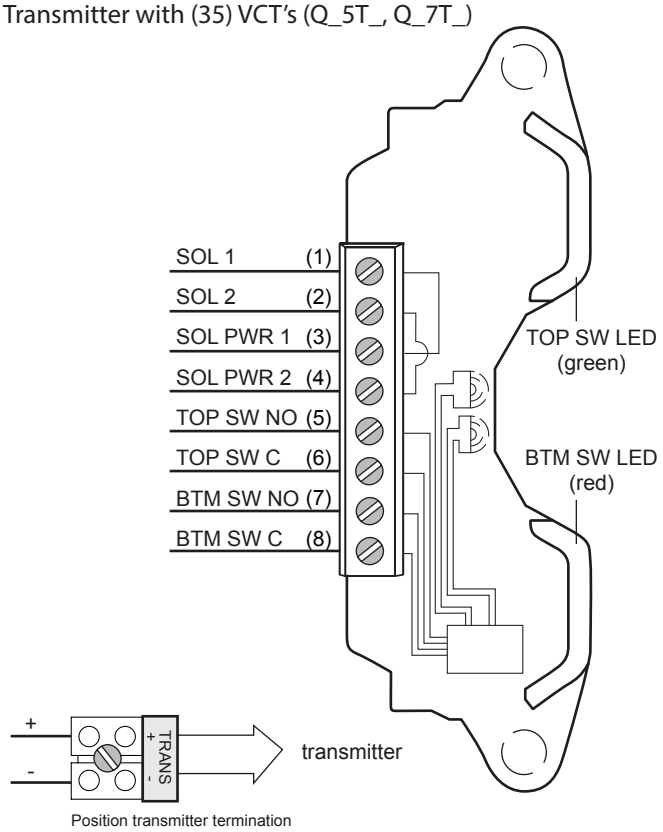

Transmitter with (45) VCT's (Q_5R_, Q_7R_)

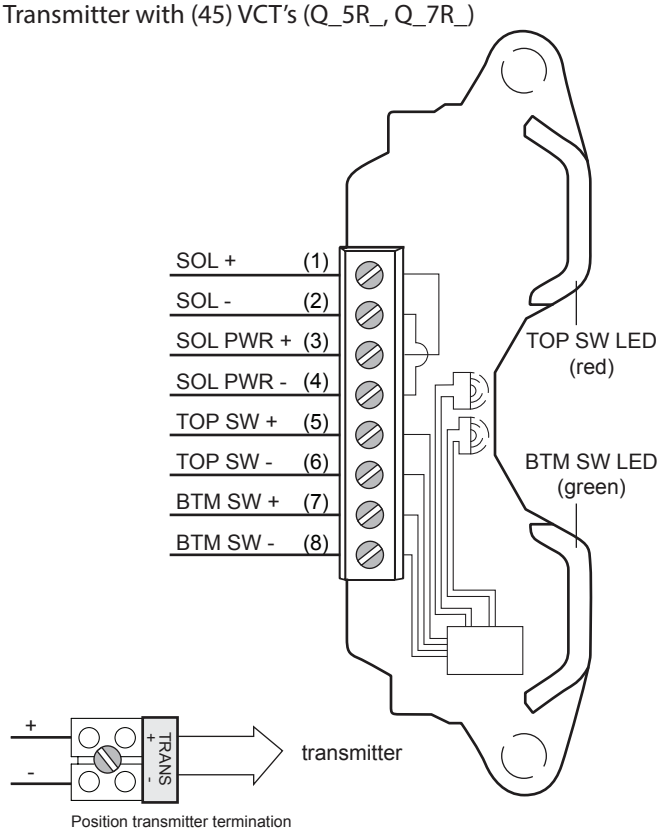

4.6.1 4 to 20 mA position transmitters with and without switches (Type 5_, 7_) continued

Position transmitter calibration

1. Connect the plug as shown for either clockwise or counterclockwise to open operation (as viewed from top).
2. Operate actuator to desired zero position. With power disconnected, connect an ohmmeter across the terminals located on top of the potentiometer. For counterclockwise rotation, connect to the terminals with the black lead and white lead. For clockwise rotation, connect the ohmmeter to the terminals with the red lead and white lead.
3. Loosen bottom set screw and rotate coupling until the ohmmeter reads between 400 - 600 ohms. Retighten setscrew. Verify the ohmmeter still reads between 400 - 600 ohms.
4. Disconnect the ohmmeter and connect DC power to the positive (+) and negative (-) terminals (see electrical schematic).
5. Adjust the screw on the zero trimpot for a 4 mA output.
6. Operate actuator to the desired 100% position.
7. Adjust the screw on the span trimpot for a 20 mA output. Zero and span adjustments are non interactive.

Note: Plug must be at one end of connector or the other

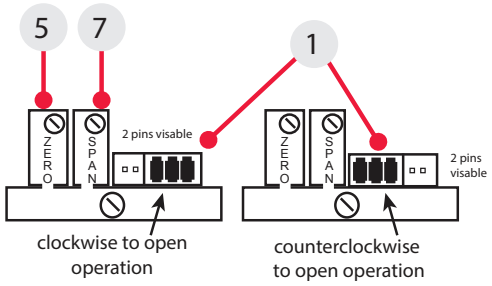

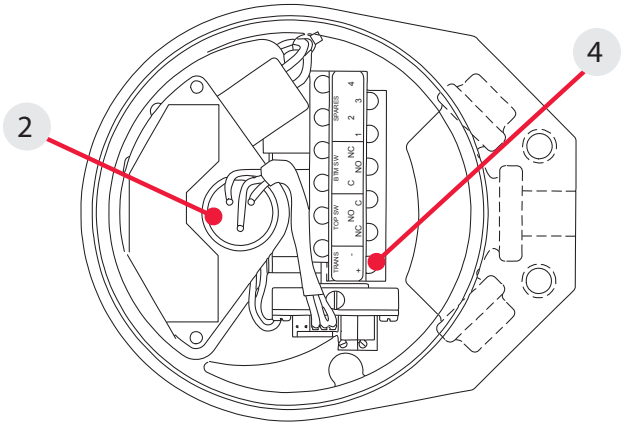

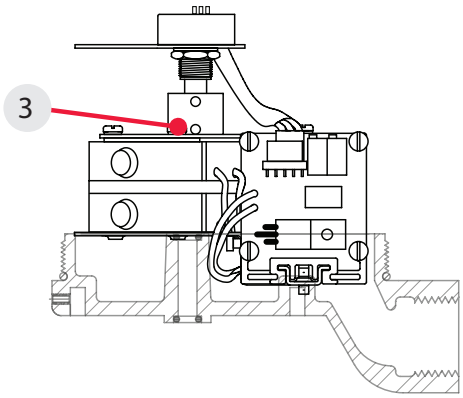

Electrical schematic

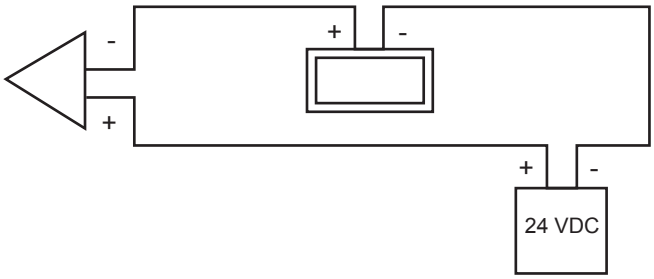

Load curve

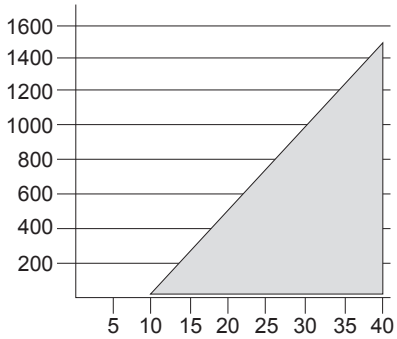

Touch & Tune switch setting

Refer to appropriate installation and adjusting instructions for bench testing and switch setting procedures for Quartz units with position transmitter and switches

QN53, QX53, QN73, QX73 see page 10
QN5T, QX5T, QN7T, QX7T see page 11
QN5X, QX5X, QN7X, QX7X see page 12
QN5E, QX5E, QN5F, QX5F, QN7E, QX7E, QN7F, QX7F see page 14
QN54, QX54, QN74, QX74 see page 16
QN5R, QX5R, QN7R, QX7R see page 17
QN5A, QX5A, QN7A, QX7A see page 18
QN5N, QX5N, QN7N, QX7N see page 20
QN5L, QX5L, QN5P, QX5P, QN7L, QX7L QN7P, QX7P, see page 21
QN5G, QX5G, QN5H, QX5H, QN5S, QX5S, QN7G, QX7G, QN7H, QX7H, QN7S, QX7S see page 22
QN5J, QX5J, QN7J, QX7J see page 23
QN5M, QX5M, QN7M, QX7M see page 24
QX5V, QX5W, QX7V, QX7W see page 25

4.6 Position transmitters and potentiometers

4.6.2 Potentiometer with and without switches (Type B_, C_)

Applicable models	
Standard potentiometer QNB_, QXB_ High performance potentiometer QNC_, QXC_	
Specifications	
Output	Standard potentiometer (B) 0-10K ohm ± 5% High performance potentiometer (C) 0-10K ohm ± 0.1%
Linearity	Standard potentiometer (B) ± 0.25% High performance potentiometer (C) ± 0.10%
Power rating	0.5 watt @ 80° C
Cycle life	Standard potentiometer (B) 2 million shaft rotations High performance potentiometer (C) 50 million shaft rotations
Vibration tolerance	Standard potentiometer (B) acceptable High performance potentiometer (C) outstanding
Temperature range	-40° to 80° C
Warranty	Two years

STOP

Reference controlled installation drawing #105193 for proper intrinsic safety installation details. Find document in the Appendix on page 54 or at www.stonel.com/en/products/quartz/installation-manuals

Caution: To prevent ignition of hazardous atmospheres, replace cover before energizing the electrical circuits. Keep cover tightly closed within operation.

Wiring diagrams

Potentiometer only

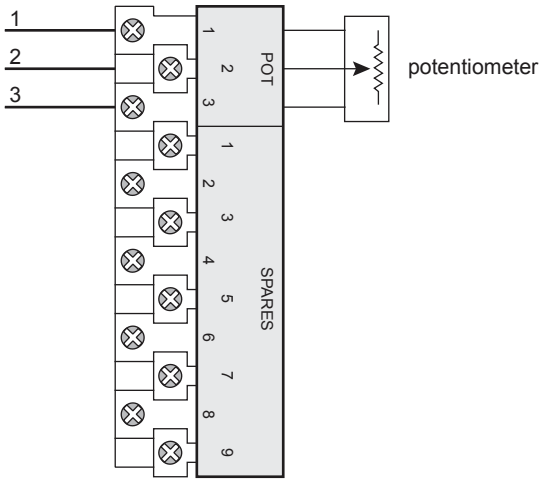

Potentiometer with SPDT switches

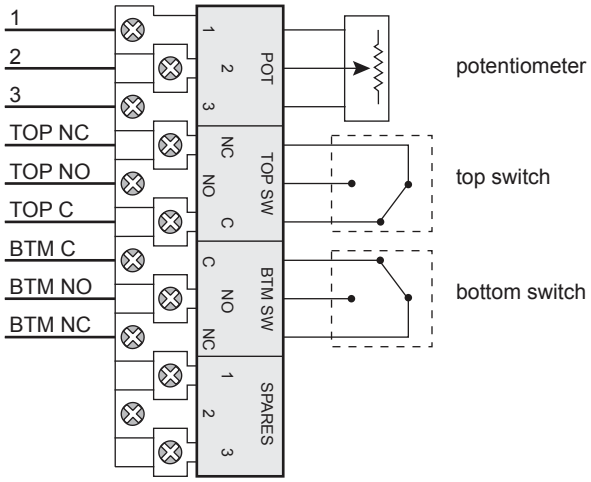

Potentiometer with SPST switches

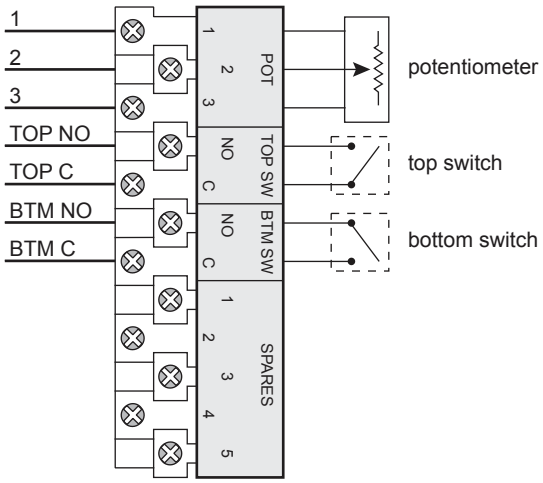

Potentiometer with solid state switches

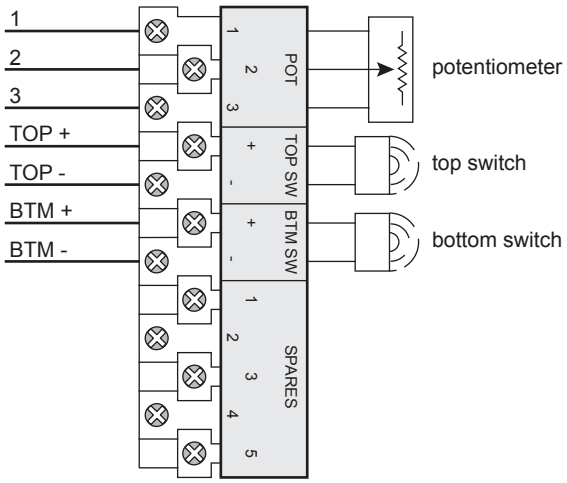

4.6.2 Potentiometer with and without switches (Type B_, C_) continued

Potentiometer with (33) VCT's (Q_B3_, Q_C3_)

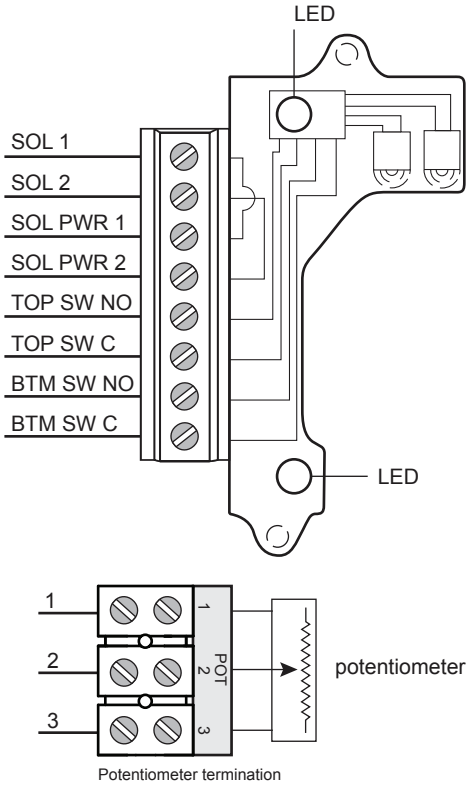

Potentiometer with (44) VCT's (Q_B4_, Q_C4_)

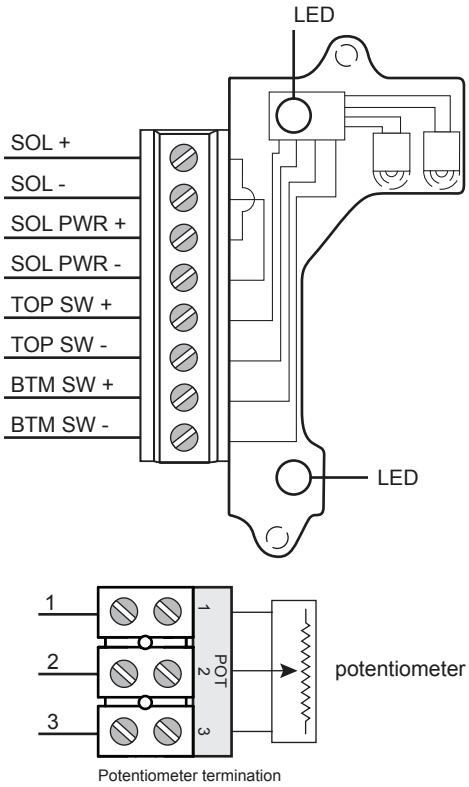

Potentiometer with (35) VCT's (Q_BT_, Q_CT_)

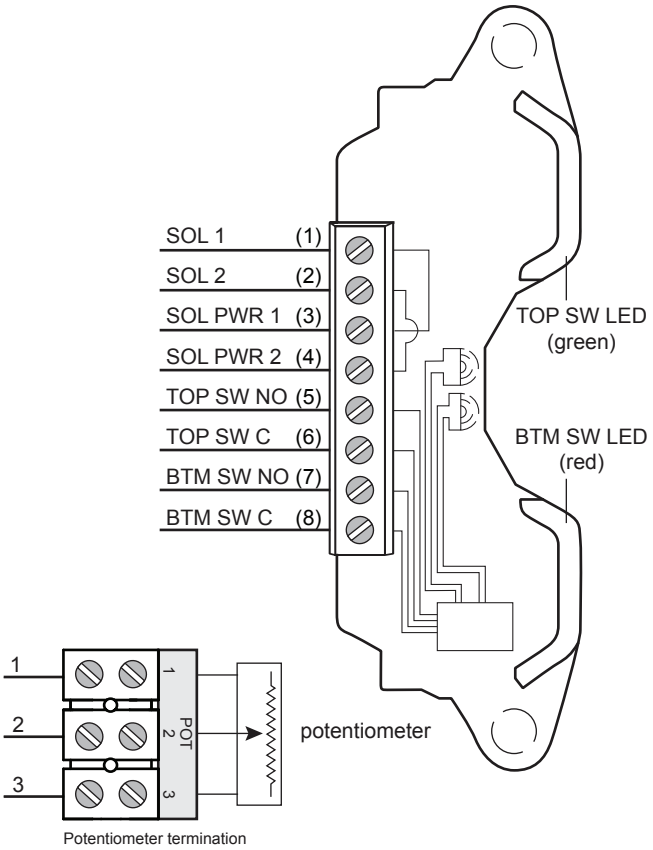

Potentiometer with (45) VCT's (Q_BR_, Q_CR_)

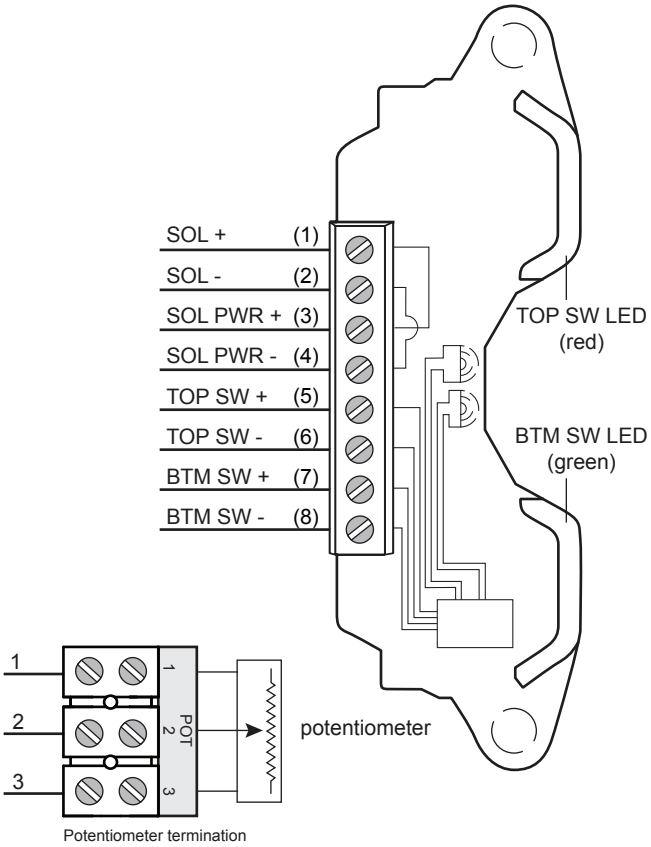

4.6.2 Potentiometer with and without switches (Type B_, C_) continued

Potentiometer calibration

1. Operate actuator to desired zero position. With power disconnected, connect an ohmmeter across the terminals located on top or side of the potentiometer. Refer to electrical schematic. For counterclockwise rotation (Ohm value to increase), connect to the terminals with the red lead and red/black lead. For clockwise rotation, connect the ohmmeter to the terminals with the red lead and red/blue lead.
2. Loosen bottom set screw and rotate coupling until the ohmmeter reads < 10 ohms. Retighten setscrew. Verify the ohmmeter still reads < 10 ohms.
3. Operate actuator to the desired 100% position (assuming 90° rotation) and verify ohmmeter reads 2.7K ohms ± 10%.
4. Remove all test equipment and place unit in service.

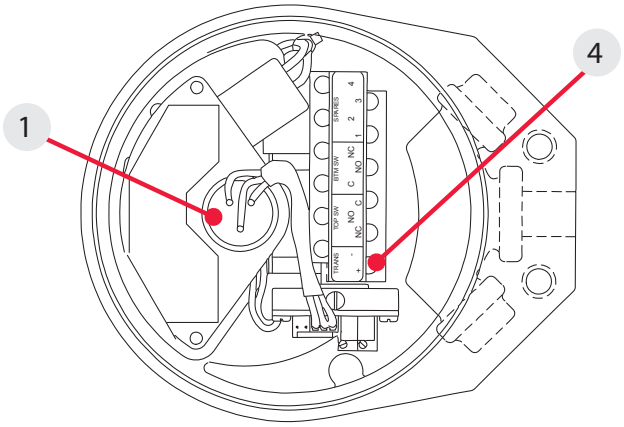

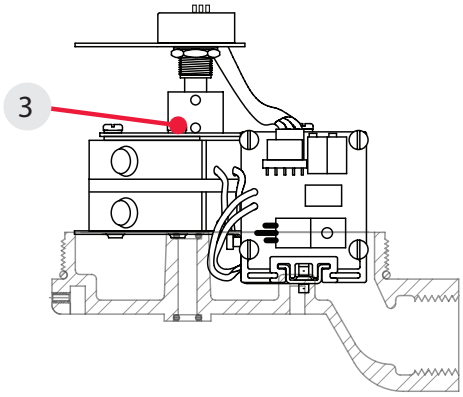

Electrical schematic

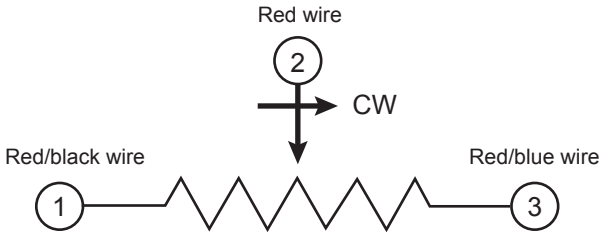

Touch & Tune switch setting

Refer to appropriate installation and adjusting instructions for bench testing and switch setting procedures for Quartz units with position transmitter and switches

QNB3, QXB3, QNC3, QXC3 see page 10
QNBT, QXBT, QNCT, QXCT see page 11
QNBX, QXBX, QNCX, QXCX see page 12
QNBE, QXBE, QNBF, QXBF, QNCE, QXCE, QNCF, QXCF see page 14
QNB4, QXB4, QNC4, QXC4 see page 16
QNBR, QXBR, QNCR, QXCR see page 17
QNBA, QXBA, QNCA, QXCA see page 18
QNBN, QXBN, QNCN, QXCN see page 20
QNBL, QXBL, QNBP, QXBP, QNCL, QXCL QNCP, QXCP, see page 21
QNBG, QXBG, QNBH, QXBH, QNBS, QXBS, QNCG, QXCG, QNCH, QXCH, QNCS, QXCS see page 22
QNBJ, QXBJ, QNCJ, QXCJ see page 23
QNBM, QXBM, QNCM, QXCM see page 24
QXBV, QXBW, QXCV, QXCW see page 25

4.6 Position transmitters and potentiometers

4.6.3 Digital position transmitter (Type T_)

Applicable models		
QNT_, QXT_		
Specifications		
Output	4-20 mA proportional to valve position	
Input voltage	10-40 VDC	
Span range	35° to 320° rotation	
Max resistance load	683 ohms @ 24 VDC	
Valid loop current	3.8 mA - 20.5 mA (NAMUR NE 43 compliant)	
Refresh rate	5 ms	
Resolution	0.02% FS	
Linearity error	+/- 0.35% FS	
Hysteresis	Negligible	
Thermal drift	+/- 0.01% FS/C°	
Terminal block specifications	Recommended torque	4.42 in.lbs (0.5 Nm)
	Conductor strip length	0.22 -0.25 in (5.5-6.5 mm)
	Maximum wire size	30-12 AWG (0.5-2.5 mm^2)
	Wire type	stranded or solid
Cycle life	Unlimited	
Temperature range	-40° to 80° C	
Warranty	Five years	

STOP

Reference controlled installation drawing #105193 for proper intrinsic safety installation details. Find document in the Appendix on page 54 or at www.stonel.com/en/products/quartz/installation-manuals

Wiring diagrams

Transmitter only (Q_TO)

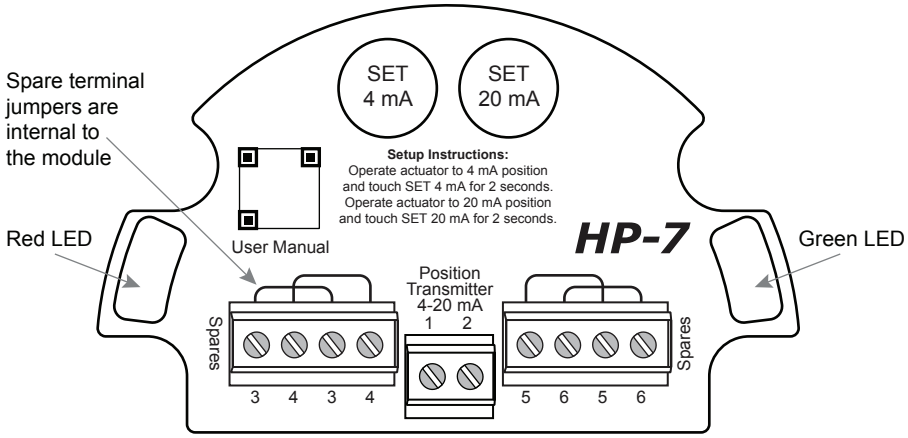

LED status indications

Green LED state	Red LED state	Loop current	Possible cause	Recommended action
Off	Solid on	4.0 mA	Valve at closed calibrated position	
Solid on	Off	20.0 mA	Valve at open calibrated position	
4 short flashes every 3 sec (- - - -)	Off	3.5 mA	Attempted calibration span greater than 320°	Perform calibration within maximum span (≤320°)
Off	4 short flashes every 3 sec (- - - -)	3.5 mA	Attempted calibration span less than 35°	Perform calibration within minimum span (≥35°)
Off	2 short flashes every 3 sec (- -)	3.4 mA	Triggering magnet not detected	Ensure triggering magnet is properly installed
Undefined	Undefined	3.37 mA	Unit micro-controller may have stopped	Power cycle sensor. If problem persists, replace sensor module
Off	1 long and 1 short flashes every 3 sec (— -)	3.3 mA	Loop error: sensor is unable to reach required current level	1) Loop voltage is too low, increase voltage 2) Loop resistance is too high, decrease loop resistance or increase loop voltage
Off	1 long and 2 short flashes every 3 sec (— - -)	3.2 mA	Internal sensor error	Power cycle sensor. If problem persists, replace sensor module

4.6.3 Digital position transmitter (Type T_) continued

Digital transmitter with (35) VCT's (Q_TT_)

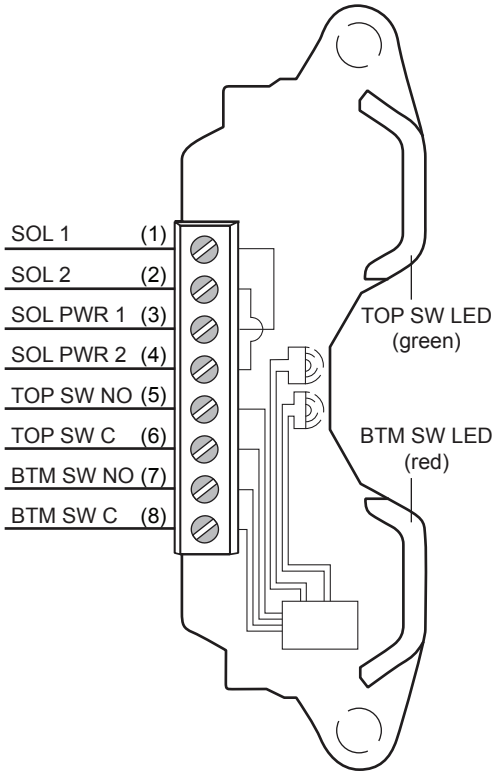

Digital transmitter with (45) VCT's (Q_TR_)

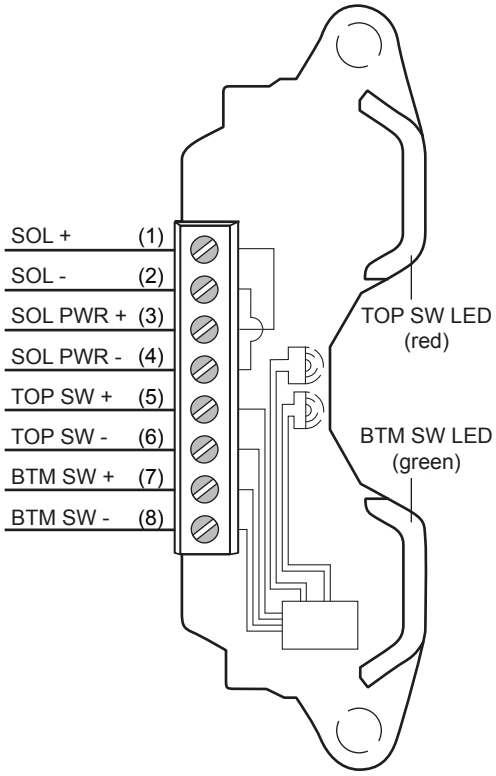

Caution: To prevent ignition of hazardous atmospheres, replace cover before energizing the electrical circuits. Keep cover tightly closed within operation.

Bench test and calibration procedure

1. Connect 24 VDC+ to terminal 1 and connect 24 VDC- to terminal 2.
2. Operate actuator to the closed position.
3. Press and hold SET 4 mA push button until Red LED is lit (2 second). Release button.
4. Operate actuator to the open position.
5. Press and hold SET 20 mA push button until Green LED is lit (2 second). Release button.
6. Setpoints are retained even after power is removed.

Touch & Tune switch setting

Refer to appropriate installation and adjusting instructions for bench testing and switch setting procedures for Quartz units with digital transmitter and switches

QNTT, QXTT see page 11
QNTE, QXTE, QNTF, QXTF page 14
QNTR, QXTR see page 17
QNTA, QXTA see page 18
QNTN, QXTN see page 20
QNTG, QXTG, QNTH, QXTH, QNTS, QXTS see page 22
QNTM, QXTM see page 24

Electrical schematic

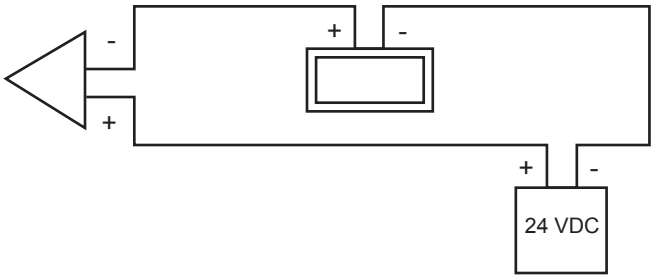

Load curve

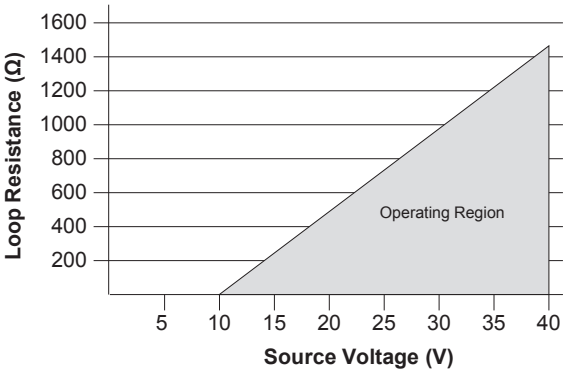

4.7 Expeditors

4.7.1 Operation sequences

Fill control operation sequence (Fig. 1)

1. Fill
   - Low level indicated
   - Controller energizes primary solenoid
   - Actuator/valve opens
   - Open switch activates
2. Top off
   - Intermediate high level indicated
   - Controller de-energizes primary solenoid and controller energizes secondary solenoid
   - Actuator/valve closes
   - Intermediate switch activates
   - Secondary solenoid energizes
   - Actuator/valve stops at pre-set intermediate position
3. Full
   - Full level indicated
   - Controller de-energizes secondary solenoid
   - Actuator/valve closes
   - Closed switch activates

Fig. 1 fill control

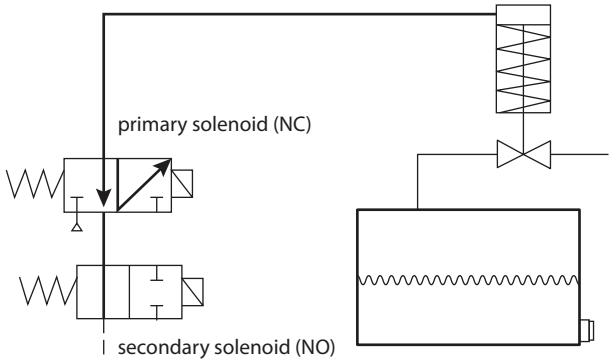

Emergency shut down (ESD) operation sequence (Fig. 2)

1. Partial close
   - Controller de-energizes primary solenoid (test mode set in controller) and controller energizes secondary solenoid
   - Actuator/valve closes
   - Intermediate switch activates
   - Secondary solenoid energizes
   - Actuator/valve stops in partially closed position.
2. Return to full open
   - Controller energizes primary solenoid
   - Actuator/valve opens
   - Open switch activates
   - Controller de-energizes secondary solenoid (test mode is de-activated)

Fig. 2 emergency shutdown (ESD)

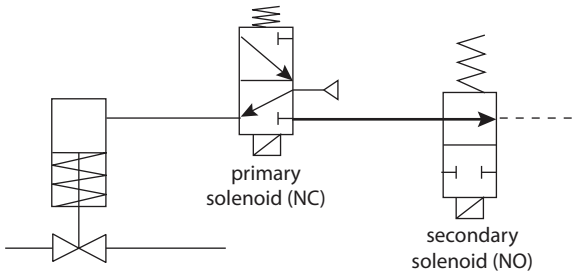

Fill control operation sequence (Fig. 3)

1. Open
   - Controller energizes primary solenoid
   - Actuator/valve opens
   - Open switch activates
2. Rapid to gradual close
   - Controller de-energizes primary solenoid and controller energizes secondary solenoid
   - Actuator/valve closes
   - "Intermediate" switch activates
   - Secondary solenoid energizes
   - Actuator/valve decelerates at preset intermediate position
3. Full close
   - Controller de-energizes primary solenoid and controller energizes secondary solenoid
   - Actuator/valve closes
   - Intermediate switch activates
   - Secondary solenoid energizes
   - Actuator/valve decelerates at preset intermediate position

Fig. 3 flow dampening

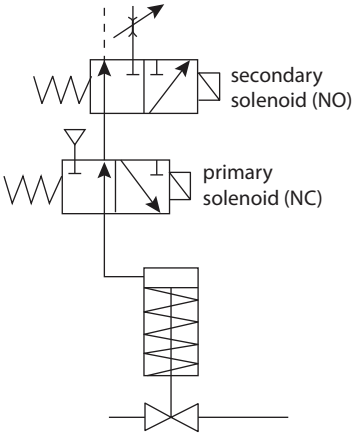

4.7 Expeditors

4.7.2 With mechanical switches (8V, 8W)

Applicable models	
QX8V_, QX8W_	
Expeditor with SPDT mechanical switches with silver contacts *(QX8V_)**	
Electrical ratings	10.0 amp @ 125/250 VAC 50/60 Hz 0.5 amp @ 125 VDC
Temperature range	-40° to 80° C
Operating life	400,000 cycles
Warranty	Two years
** Not recommended for electrical circuits operating at less than 20 mA @ 24 VDC*	
Expeditor with SPDT mechanical switches with gold contacts *(QX8W_)***	
Electrical ratings	1.0 amp @ 125 VAC 50/60 Hz 0.5 amp @ 30 VDC
Temperature range	-40° to 80° C
Operating life	100,000 cycles
Warranty	Two years
*** Recommended for use in 24 VDC computer input applications*	

Intermediate switch setting

At full closed position lift top cam and rotate in clockwise direction past 0° to desired degree setting for intermediate switch to be energized. After setting is made, run actuator to full open position. De-energize primary solenoid and observe valve position after intermediate switch is activated and secondary solenoid is energized. Readjust top cam if necessary to increase or decrease angle of valve when intermediate switch is activated.

Wiring diagram

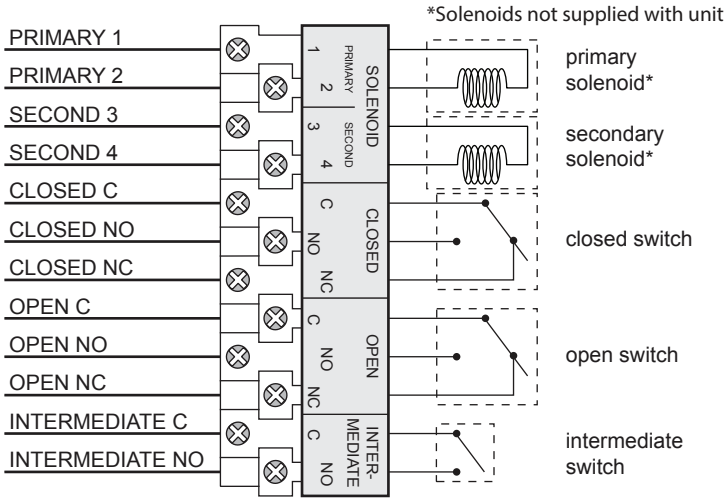

Intermediate switch

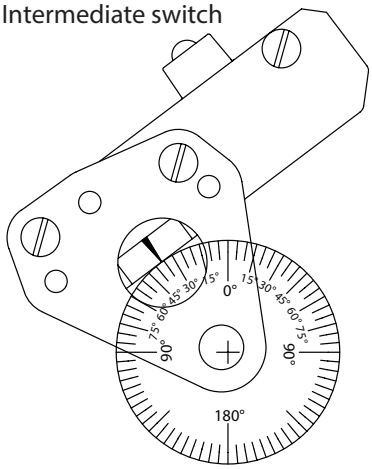

Touch & Tune switch setting

All adjustments assume you are looking down on the top of the sensors. The edge of the cam metal strip will be at the edge of the sensor target when activation occurs. When the cam is released be sure it slides fully onto the spline. One spline tooth setting is 4 ½°.

1. At full open position depress middle cam and rotate until switch is activated. Release cam and be sure it slides fully onto spline.
2. At full closed position lift bottom cam and rotate until switch is activated. Release cam and be sure it slides fully onto spline.

Caution: To prevent ignition of hazardous atmospheres, replace cover before energizing the electrical circuits. Keep cover tightly closed within operation.

4.7 Expeditors

4.7.3 With Maxx-Guard proximity sensors (8Y)

Applicable models	
QN8Y_, QX8Y_	
Specifications	
Electrical ratings	0.10 amp @ 125 VAC 50/60 Hz
Maximum voltage drop	3.5 volts @ 10 mA 6.5 volts @ 100 mA
Temperature range	-40° to 80° C
Operating life	5 million cycles
Seal	Hermetically sealed reed switches
Warranty	Two years
Not recommended for electrical circuits operating at less than 20 mA @ 24 VDC	

Intermediate switch setting

At full closed position lift top cam and rotate in clockwise direction past 0° to desired degree setting for intermediate switch to be energized. After setting is made, run actuator to full open position. De-energize primary solenoid and observe valve position after intermediate switch is activated and secondary solenoid is energized. Readjust top cam if necessary to increase or decrease angle of valve when intermediate switch is activated.

Wiring diagram

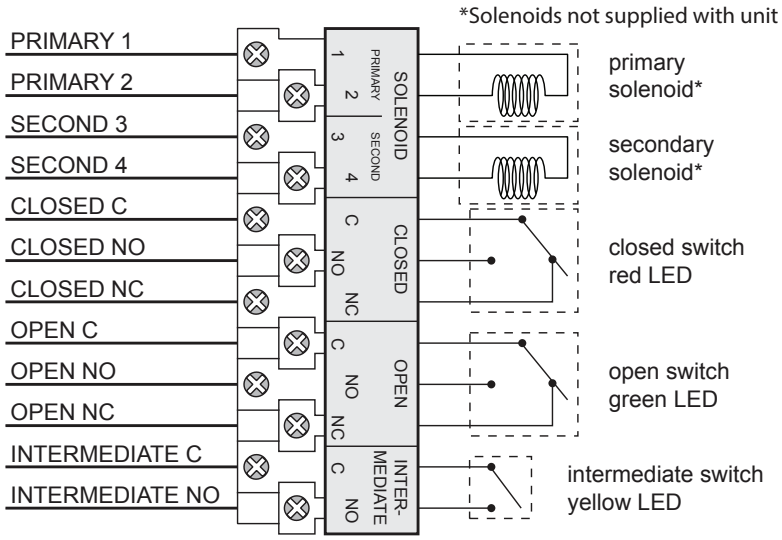

Intermediate switch

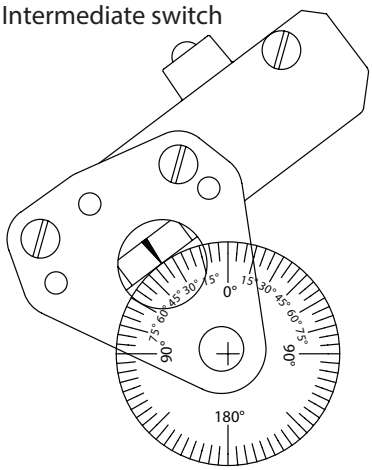

Touch & Tune switch setting

All adjustments assume you are looking down on the top of the sensors. The edge of the cam metal strip will be at the edge of the sensor target when activation occurs. When the cam is released be sure it slides fully onto the spline. One spline tooth setting is 4 ½°.

1. At full open position depress middle cam and rotate until sensor is activated. (White highlights will overlap and green LED will light if power is applied.) Release cam and be sure it slides fully onto spline.
2. At full closed position lift bottom cam and rotate until sensor is activated. (White highlights will overlap and red LED will light if power is applied.) Release cam and be sure it slides fully onto spline.

Caution: To prevent ignition of hazardous atmospheres, replace cover before energizing the electrical circuits. Keep cover tightly closed within operation.

4.7 Expeditors

4.7.4 With DeviceNet™ communication (82)

Applicable models	
QN82_, QX82_	
Intermediate switch specifications	
See also to DeviceNet™ module specifications and adjustment procedures on page 28	
Electrical ratings	0.10 amp @ 125 VAC 50/60 Hz
Maximum voltage drop	3.5 volts @ 10 mA 6.5 volts @ 100 mA
Temperature range	-40° to 80° C
Operating life	5 million cycles
Seal	Hermetically sealed reed switch
Warranty	Two years

Wiring diagram

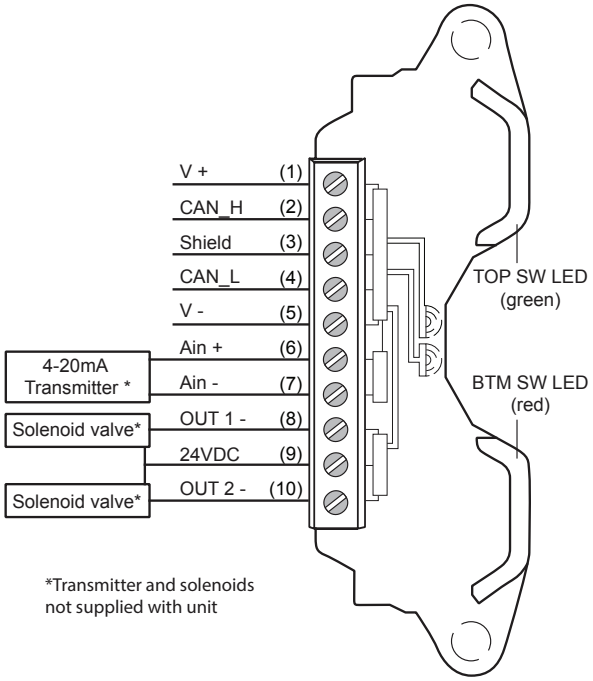

WARNING
Do not apply external power to output terminals as this will damage the module.

Touch & Tune switch setting

All adjustments assume you are looking down on the top of the sensors. The edge of the cam metal strip will be at the edge of the sensor target when activation occurs. When the cam is released be sure it slides fully onto the spline. One spline tooth setting is 4 ½°.

1. At full open position depress middle cam and rotate until sensor is activated. (White highlights will overlap and green LED will light if power is applied.) Release cam and be sure it slides fully onto spline.
2. At full closed position lift bottom cam and rotate until sensor is activated. (White highlights will overlap and red LED will light if power is applied.) Release cam and be sure it slides fully onto spline.

Intermediate switch setting

At full closed position lift top cam and rotate in clockwise direction past 0° to desired degree setting for intermediate switch to be energized. After setting is made, run actuator to full open position. De-energize primary solenoid and observe valve position after intermediate switch is activated and secondary solenoid is energized. Readjust top cam if necessary to increase or decrease angle of valve when intermediate switch is activated.

Caution: To avoid damaging the module when performing the position switch calibration procedure, apply 24 VDC across V + and V -. Use the LEDs to determine when switches are made. You cannot do this procedure with an ohmmeter. No series load resistor is required when attaching a 24 VDC power supply for switch setting.

Caution: To prevent ignition of hazardous atmospheres, replace cover before energizing the electrical circuits. Keep cover tightly closed within operation.

4.7 Expeditors

4.7.5 With Foundation Fieldbus communication (83)

Applicable models	
QN83_, QX83_	
Intermediate switch specifications	
See also Foundation Fieldbus module specifications and adjustment procedures on page 30	
Electrical ratings	0.10 amp @ 125 VAC 50/60 Hz
Maximum voltage drop	3.5 volts @ 10 mA 6.5 volts @ 100 mA
Temperature range	-40° to 80° C
Operating life	5 million cycles
Seal	Hermetically sealed reed switch
Warranty	Two years

Intermediate switch setting

At full closed position lift top cam and rotate in clockwise direction past 0° to desired degree setting for intermediate switch to be energized. After setting is made, run actuator to full OPEN position. De-energize primary solenoid and observe valve position after intermediate switch is activated and secondary solenoid is energized. Readjust top cam if necessary to increase or decrease angle of valve when intermediate switch is activated.

Wiring diagram

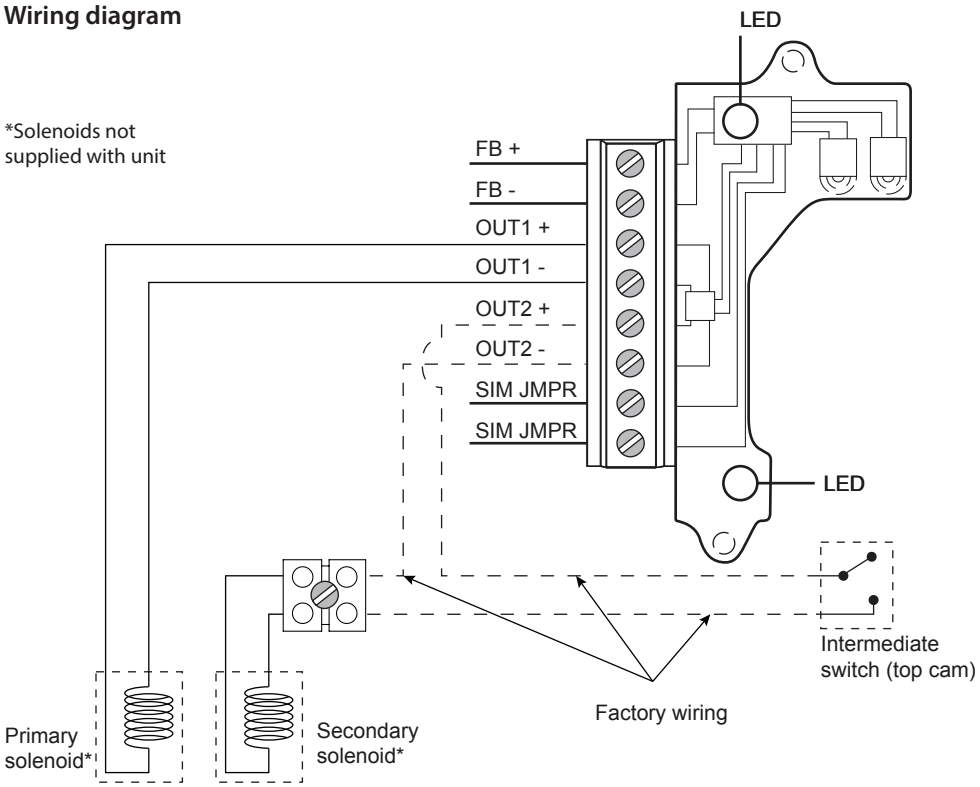

WARNING
Do not apply external power to output terminals as this will damage the module.

Caution: To avoid damaging the module when performing the position switch calibration procedure, apply 9 - 32 VDC across FB + and FB -. Use the LEDs to determine when switches are made. You cannot do this procedure with an ohmmeter. No series load resistor is required when attaching a 24 VDC power supply for switch setting.

Touch & Tune switch setting

All adjustments assume you are looking down on the top of the sensors. The edge of the cam metal strip will be at the edge of the sensor target when activation occurs. When the cam is released be sure it slides fully onto the spline. One spline tooth setting is 4 ½°.

1. At full open position depress middle cam and rotate until sensor is activated. (White highlights will overlap and green LED will light if power is applied.) Release cam and be sure it slides fully onto spline.
2. At full closed position lift bottom cam and rotate until sensor is activated. (White highlights will overlap and red LED will light if power is applied.) Release cam and be sure it slides fully onto spline.

Caution: To prevent ignition of hazardous atmospheres, replace cover before energizing the electrical circuits. Keep cover tightly closed within operation.

4.7 Expeditors

4.7.6 With AS-Interface communication (86)

Applicable models	
QN86_, QX86_	
Intermediate switch specifications	
See also AS-Interface module specifications and adjustment procedures on page 32	
Electrical ratings	0.10 amp @ 125 VAC 50/60 Hz
Maximum voltage drop	3.5 volts @ 10 mA 6.5 volts @ 100 mA
Temperature range	-40° to 80° C
Operating life	5 million cycles
Seal	Hermetically sealed reed switch
Warranty	Two years

Intermediate switch setting

At full closed position lift top cam and rotate in clockwise direction past 0° to desired degree setting for intermediate switch to be energized. After setting is made, run actuator to full open position. De-energize primary solenoid and observe valve position after intermediate switch is activated and secondary solenoid is energized. Readjust top cam if necessary to increase or decrease angle of valve when intermediate switch is activated.

Wiring diagram

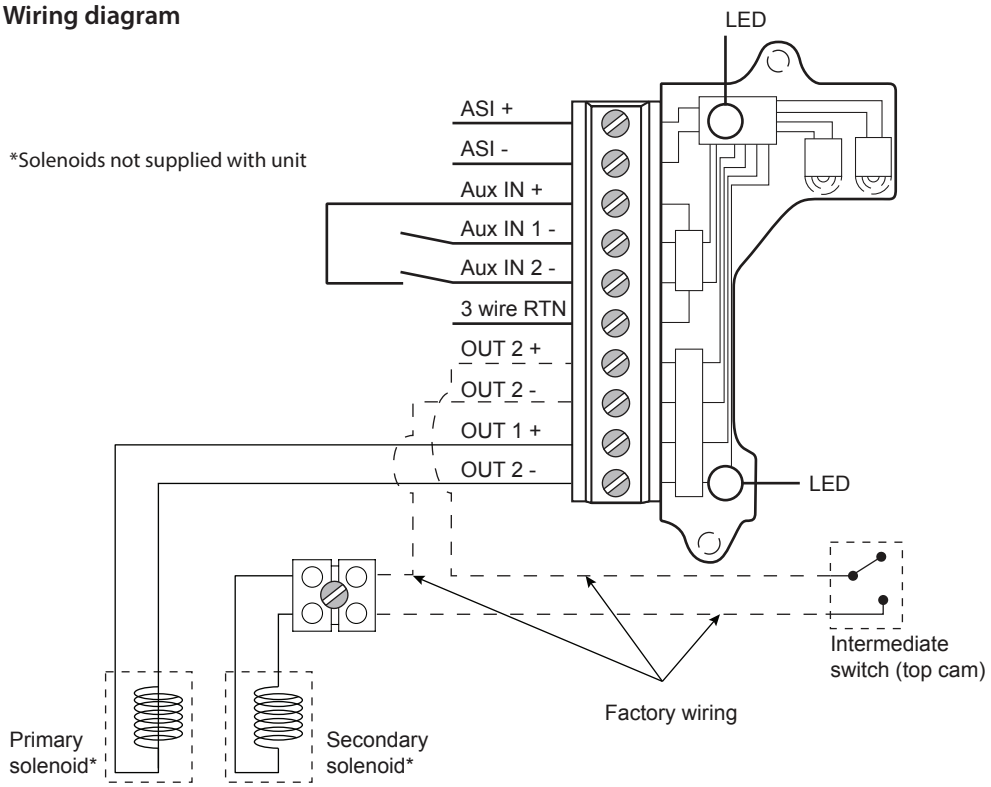

WARNING
Do not apply external power to output terminals as this will damage the module.

Caution: To avoid damaging the module when performing the position switch calibration procedure, apply 24 - 30 VDC across ASI + and ASI -. Use the LEDs to determine when switches are made. You cannot do this procedure with an ohmmeter. No series load resistor is required when attaching a 24 VDC power supply for switch setting.

Touch & Tune switch setting

All adjustments assume you are looking down on the top of the sensors. The edge of the cam metal strip will be at the edge of the sensor target when activation occurs. When the cam is released be sure it slides fully onto the spline. One spline tooth setting is 4 ½°.

1. At full open position depress middle cam and rotate until sensor is activated. (White highlights will overlap and green LED will light if power is applied.) Release cam and be sure it slides fully onto spline.
2. At full closed position lift bottom cam and rotate until sensor is activated. (White highlights will overlap and red LED will light if power is applied.) Release cam and be sure it slides fully onto spline.

Caution: To prevent ignition of hazardous atmospheres, replace cover before energizing the electrical circuits. Keep cover tightly closed within operation.

5 Model/Type code

5.1 QCabcdef

a = 2W, 4W, 2V, 4V, 35, 45
b = B, E, J, L, N, R, S, T, V
c = 03, 06
d = S, N, H
e = A, C, D, G, N, R, S, T, U, V, W, X, 1, 2, 3, 4, 5, 0
f = A or M

5.2 QGabcdef

a = 2W, 4W, 6W, 2V, 4V, 6V, 14
b = A, C, P
c = 02, 03, 05, 06
d = S, N, H
e = A, C, D, G, N, R, S, T, U, V, W, X, 1, 2, 3, 4, 5, 0
f = A or M

5.3 QNabcdef

a = 2A, 4A, 5A, 7A, 2B, 2E, 4E, 5E, 7E, 2F, 4F, 5F, 7F, 2G, 4G, 5G, 7G,
2H, 4H, 5H, 7H, 8H, 2J, 4J, 5J, 7J, 2L, 4L, 5L, 7L,
2M, 4M, 5M, 7M, 2N, 4N, 5N, 6N, 7N, 5O, 7O, 2P, 4P, 5P, 7P, 5R, 7R,
2S, 4S, 5S, 7S, 5T, 7T, 4X, 6X, 8Y, 33, 35, 44, 45, 53, 54,
73, 74, 82, 83, 84, 86, 87, 92, 93, 94, 96, 97, 98, B3, C3, B4, C4,
BA, CA, BE, CE, BF, CF, BG, CG, BH, CH, BJ, CJ, BL, CL, BM,
CM, BN, CN, BO, CO, BP, CP, BR, CR, BS, CS, BT, CT
TA, TE, TF, TG, TH, TM, TN, TO, TR, TS, TT
b = A, B, C, D, E, F, G, H, J, L, M, N, P, Q, R, S, T, U, V, W, Y, Z
c = 02, 03, 05, 06
d = S, N, H
e = A, C, D, G, N, R, S, T, U, V, W, X, 1, 2, 3, 4, 5, 0
f = A or M

5.4 QXabcdef

a = 2A, 4A, 5A, 7A, 2B, 2E, 4E, 5E, 7E, 2F, 4F, 5F, 7F, 2G, 4G, 5G, 7G,
2H, 4H, 5H, 7H, 8H, 2J, 4J, 5J, 7J, 2L, 4L, 5L, 7L,
2M, 4M, 5M, 7M, 2N, 4N, 5N, 6N, 7N, 5O, 7O, 2P, 4P, 5P, 7P, 5R, 7R,
2S, 4S, 5S, 7S, 5T, 7T, 2V, 4V, 5V, 6V, 7V, 8V, 2W, 4W, 5W, 6W, 7W, 8W,
4X, 6X, 8Y, 14, 33, 35, 44, 45, 53, 54, 73, 74, 82, 83, 84, 86, 87,
92, 93, 94, 96, 97, 98, B3, C3, B4, C4, BA, CA, BE, CE, BF, CF, BG, CG,
BH, CH, BJ, CJ, BL, CL, BM, CM, BN, CN, BO, CO, BP, CP, BR, CR,
BS, CS, BT, CT, BV, CV, BW, CW
TA, TE, TF, TG, TH, TM, TN, TO, TR, TS, TT
b = B, E, F, G, J, L, M, N, R, S, T, V, W
c = 02, 03, 05, 06
d = S, N, H
e = A, C, D, G, N, R, S, T, U, V, W, X, 1, 2, 3, 4, 5, 0
f = A or M

6 Regulatory, specific conditions of use, and product marking

DECLARATION OF CONFORMITY

Manufacturer:
Neles USA Inc. dba StoneL
26271 US Highway 59
Fergus Falls, Minnesota 56537 USA

Products:
Quartz QN Series – Valve Position Monitors and Valve Communication Terminals
Quartz QX Series – Valve Position Monitors and Valve Communication Terminals
Quartz QC Series – Valve Position Monitors and Valve Communication Terminals
Quartz QG Series – Valve Position Monitors and Valve Communication Terminals

Model - Type	Certificates / Directives / Standards	Marking
QN Series QX Series QC Series	EU Type Examination Certificate FM10ATEX0039X ATEX 2014/34/EU EN 60079-0:2018, EN 60079-11:2012 EMC 2014/30/EU EN 60947-5-2:2007/A1:2012	Ex CE 2809 ATEX II 1 G Ex ia IIC T6…T1 Ga
QX Series QC Series	EU Type Examination Certificate FM08ATEX0008X ATEX 2014/34/EU EN 60079-0:2018, EN 60079-1:2014 EMC 2014/30/EU EN 60947-5-2:2007/A1:2012	Ex CE 2809 ATEX II 2 G c Ex db IIC T6…T5 Gb
QX Series QC Series	IECEx Certificate of Conformity IECEx FMG 11.0001X IEC 60079-0:2017, IEC 60079-1:2014	Ex db IIC T6…T5 Gb
QN Series QX Series QG Series QC Series	EMC 2014/30/EU EN 60947-5-2:2007/A1:2012	CE

ATEX Notified Bodies for EU Type Examination Certificates:
FM Approvals Europe Ltd., Dublin, Ireland (Notified Body Number 2809)

Manufacturing Locations:
26271 US Hwy 59, Fergus Falls, Minnesota 56537 USA
Product Serial Number Designation = **A******

Vanha Porvoontie 229, FIN-01380 Vantaa, Finland
Product Serial Number Designation = **V******

261 Meiyue Rd, Waigaoqiao Free Trade Zone, 200131 Shanghai, China
Product Serial Number Designation = **S******

We declare under our sole responsibility that the products, as described, are in conformity with the listed standards and directives.

Fergus Falls, 10th February 2020

Bryan Beckman, Quality Manager
Authorized Person of the Manufacturer

105414revD

6 Regulatory, specific conditions of use, and product marking continued

SPECIFIC CONDITIONS OF USE / MARKING

For QN, QX and QC Series -- FM10ATEX0039X	
Specific Conditions of Use - Notes	**Marking**
1. Parts of the enclosure are non-conducting and may generate an ignition-capable level of electrostatic charge under certain extreme conditions. The user should ensure that the equipment is not installed in a location where it may be subjected to external conditions which might cause a build up of electrostatic charge on non-conducting surfaces. Additionally, cleaning of the equipment should be done only with a damp cloth. 2. When installed within a Zone 0 location, the aluminum alloy enclosure shall be installed in such a manner as to prevent the possibility of sparks resulting from friction or impact. 3. Using the box provided on the nameplate, the user shall permanently mark the Type of Protection chosen for the specific installation. Once the Type of Protection has been marked it shall not be changed. NOTE: See also FM08ATEX0008X for Series QN, QX and QC with Type of Protection “d”. See also Control Drawing 105193 for “Ex ia” installation.	ATEX II 1 G Ex ia IIC T4…T1 Ga Ta = -25°C to +80°C ATEX II 1 G Ex ia IIC T4…T1 Ga Ta = -25°C to +68°C ATEX II 1 G Ex ia IIC T4…T1 Ga Ta = -25°C to +53°C ATEX II 1 G Ex ia IIC T4…T1 Ga Ta = -40°C to +80°C ATEX II 1 G Ex ia IIC T4…T1 Ga Ta = -40°C to +74°C ATEX II 1 G Ex ia IIC T4…T1 Ga Ta = -40°C to +61°C ATEX II 1 G Ex ia IIC T4…T1 Ga Ta = -25°C to +74°C ATEX II 1 G Ex ia IIC T4…T1 Ga Ta = -25°C to +61°C ATEX II 1 G Ex ia IIC T5 Ga Ta = -55°C to +80°C ATEX II 1 G Ex ia IIC T5 Ga Ta = -40°C to +80°C ATEX II 1 G Ex ia IIC T5 Ga Ta = -40°C to +69°C ATEX II 1 G Ex ia IIC T5 Ga Ta = -40°C to +64°C ATEX II 1 G Ex ia IIC T5 Ga Ta = -40°C to +46°C ATEX II 1 G Ex ia IIC T5 Ga Ta = -40°C to +34°C ATEX II 1 G Ex ia IIC T5 Ga Ta = -25°C to +68°C ATEX II 1 G Ex ia IIC T5 Ga Ta = -25°C to +61°C ATEX II 1 G Ex ia IIC T5 Ga Ta = -25°C to +40°C ATEX II 1 G Ex ia IIC T5 Ga Ta = -25°C to +25°C ATEX II 1 G Ex ia IIC T5 Ga Ta = -25°C to +69°C ATEX II 1 G Ex ia IIC T5 Ga Ta = -25°C to +64°C ATEX II 1 G Ex ia IIC T5 Ga Ta = -25°C to +46°C ATEX II 1 G Ex ia IIC T5 Ga Ta = -25°C to +34°C ATEX II 1 G Ex ia IIC T6 Ga Ta = -55°C to +65°C ATEX II 1 G Ex ia IIC T6 Ga Ta = -40°C to +65°C ATEX II 1 G Ex ia IIC T6 Ga Ta = -40°C to +57°C ATEX II 1 G Ex ia IIC T6 Ga Ta = -40°C to +52°C ATEX II 1 G Ex ia IIC T6 Ga Ta = -40°C to +34°C ATEX II 1 G Ex ia IIC T6 Ga Ta = -40°C to +22°C ATEX II 1 G Ex ia IIC T6 Ga Ta = -25°C to +56°C ATEX II 1 G Ex ia IIC T6 Ga Ta = -25°C to +49°C ATEX II 1 G Ex ia IIC T6 Ga Ta = -25°C to +28°C ATEX II 1 G Ex ia IIC T6 Ga Ta = -25°C to +13°C ATEX II 1 G Ex ia IIC T6 Ga Ta = -25°C to +57°C ATEX II 1 G Ex ia IIC T6 Ga Ta = -25°C to +52°C ATEX II 1 G Ex ia IIC T6 Ga Ta = -25°C to +34°C ATEX II 1 G Ex ia IIC T6 Ga Ta = -25°C to +22°C

For QX and QC Series -- FM08ATEX0008X	
Specific Conditions of Use - Notes	**Marking**
1. To minimize the risk of electrostatic sparking, the equipment shall be cleaned only with a damp cloth. 2. Using the box provided on the nameplate, the user shall permanently mark the Type of Protection chosen for the specific installation. Once the Type of Protection has been marked it shall not be changed. 3. Consult the manufacturer if dimensional information on the flameproof joints is necessary. NOTE: See also FM10ATEX0039X for Series QX and QC with Type of Protection “i”.	ATEX II 2 G c Ex db IIC T5 Gb Ta = -55°C to +80°C ATEX II 2 G c Ex db IIC T5 Gb Ta = -40°C to +80°C ATEX II 2 G c Ex db IIC T5 Gb Ta = -25°C to +68°C ATEX II 2 G c Ex db IIC T5 Gb Ta = -40°C to +69°C ATEX II 2 G c Ex db IIC T6 Gb Ta = -55°C to +65°C ATEX II 2 G c Ex db IIC T6 Gb Ta = -40°C to +65°C ATEX II 2 G c Ex db IIC T6 Gb Ta = -25°C to +70°C ATEX II 2 G c Ex db IIC T6 Gb Ta = -25°C to +56°C ATEX II 2 G c Ex db IIC T6 Gb Ta = -40°C to +57°C ATEX II 2 G c Ex db IIC T6 Gb Ta = -25°C to +69°C ATEX II 2 G c Ex db IIC T6 Gb Ta = -25°C to +57°C

For QX and QC Series -- IECEx FMG 11.0001X	
Specific Conditions of Use - Notes	**Marking**
1. To minimize the risk of electrostatic sparking, the equipment shall be cleaned only with a damp cloth. 2. Consult the manufacturer if dimensional information on the flameproof joints is necessary.	Ex db IIC T5 Gb Ta = -55°C to +80°C Ex db IIC T5 Gb Ta = -40°C to +80°C Ex db IIC T5 Gb Ta = -25°C to +68°C Ex db IIC T5 Gb Ta = -40°C to +69°C Ex db IIC T6 Gb Ta = -55°C to +65°C Ex db IIC T6 Gb Ta = -40°C to +65°C Ex db IIC T6 Gb Ta = -25°C to +70°C Ex db IIC T6 Gb Ta = -25°C to +56°C Ex db IIC T6 Gb Ta = -40°C to +57°C Ex db IIC T6 Gb Ta = -25°C to +69°C Ex db IIC T6 Gb Ta = -25°C to +57°C

6 Regulatory, specific conditions of use, and product marking continued

For QN, QX and QC Series – IECEx FMG 19.0016X	
Specific Conditions of Use - Notes	**Marking**
1. Parts of the enclosure are non-conducting and may generate an ignition-capable level of electrostatic charge under certain extreme conditions. The user should ensure that the equipment is not installed in a location where it may be subjected to external conditions which might cause a build up of electrostatic charge on non-conducting surfaces. Additionally, cleaning of the equipment should be done only with a damp cloth. 2. When installed within a Zone 0 location, the aluminum alloy enclosure shall be installed in such a manner as to prevent the possibility of sparks resulting from friction or impact. 3. Using the box provided on the nameplate, the user shall permanently mark the Type of Protection chosen for the specific installation. Once the Type of Protection has been marked it shall not be changed.	Ex ia IIC T4…T1 Ga Ta = -25°C to +80°C Ex ia IIC T4…T1 Ga Ta = -25°C to +68°C Ex ia IIC T4…T1 Ga Ta = -25°C to +53°C Ex ia IIC T4…T1 Ga Ta = -40°C to +80°C Ex ia IIC T4…T1 Ga Ta = -40°C to +74°C Ex ia IIC T4…T1 Ga Ta = -40°C to +61°C Ex ia IIC T4…T1 Ga Ta = -25°C to +74°C Ex ia IIC T4…T1 Ga Ta = -25°C to +61°C Ex ia IIC T5 Ga Ta = -55°C to +80°C Ex ia IIC T5 Ga Ta = -40°C to +80°C Ex ia IIC T5 Ga Ta = -40°C to +69°C Ex ia IIC T5 Ga Ta = -40°C to +64°C Ex ia IIC T5 Ga Ta = -40°C to +46°C Ex ia IIC T5 Ga Ta = -40°C to +34°C Ex ia IIC T5 Ga Ta = -25°C to +68°C Ex ia IIC T5 Ga Ta = -25°C to +61°C Ex ia IIC T5 Ga Ta = -25°C to +40°C Ex ia IIC T5 Ga Ta = -25°C to +25°C Ex ia IIC T5 Ga Ta = -25°C to +69°C Ex ia IIC T5 Ga Ta = -25°C to +64°C Ex ia IIC T5 Ga Ta = -25°C to +46°C Ex ia IIC T5 Ga Ta = -25°C to +34°C Ex ia IIC T6 Ga Ta = -55°C to +65°C Ex ia IIC T6 Ga Ta = -40°C to +65°C Ex ia IIC T6 Ga Ta = -40°C to +57°C Ex ia IIC T6 Ga Ta = -40°C to +52°C Ex ia IIC T6 Ga Ta = -40°C to +34°C Ex ia IIC T6 Ga Ta = -40°C to +22°C Ex ia IIC T6 Ga Ta = -25°C to +56°C Ex ia IIC T6 Ga Ta = -25°C to +49°C Ex ia IIC T6 Ga Ta = -25°C to +28°C Ex ia IIC T6 Ga Ta = -25°C to +13°C Ex ia IIC T6 Ga Ta = -25°C to +57°C Ex ia IIC T6 Ga Ta = -25°C to +52°C Ex ia IIC T6 Ga Ta = -25°C to +34°C Ex ia IIC T6 Ga Ta = -25°C to +22°C

For QX and QC Series – FM17US0048X / FM17CA0026X	
Specific Conditions of Use - Notes	**Marking**
1. Consult the manufacturer if dimensional information on the flameproof joints is necessary.	XP / I / 1 / BCD DIP / II-III / 1 / EFG NI / I-II-III / 2 / ABCDEFG I / 1 / AEx db IIC T5 Gb I / 2 / IIC / T5 Gc *See Approval Certificates for applicable models / type codes.

For QN and QC Series – FM17US0129X / FM17CA0072X	
Specific Conditions of Use - Notes	**Marking**
1. Parts of the enclosure is constructed from plastic. To prevent the risk of electrostatic sparking the plastic surface should only be cleaned only with a damp cloth. 2. The apparatus enclosure may contain aluminum which is considered to constitute a potential risk of ignition by impact or friction. Care must be taken into account during installation and use to prevent impact or friction. NOTE: See also Control Drawing 105193 for “IS” installation.	NI / I-II-III / 2 / ABCDEFG I / 2 / IIC / T5 Gc IS / I, II, III / 1 / ADBCDEFG – 105193 Cl I / Zone 0 / AEx ia IIC T6…T1 Ga Cl I / Zone 0 / Ex ia IIC T6…T1 Ga *See Approval Certificates for applicable models / type codes.

7 Appendix

7.1 Controlled installation drawings

QN5*_, QX5*_, QN7*_, QX7*_

NOTE:

1) IF * IS "J", ALSO SEE SHEET 4.
2) IF * IS "M", ALSO SEE SHEET 5.
3) IF * IS "4" OR "R", ALSO SEE SHEET 6.
4) IF * IS "N", ALSO SEE SHEET 7.
5) IF * IS "A", ALSO SEE SHEET 8.

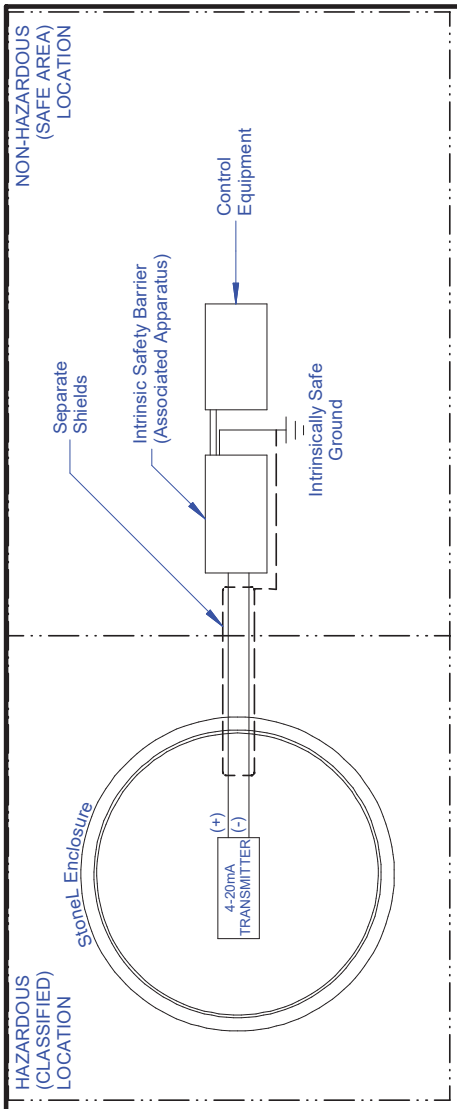

INSTALLATION NOTES (Class I, II, III; Division 1; Groups A, B, C, D, E, F, G):

Entity Parameters: Vmax = 30 V; Imax = 100 mA; Ci = 66 nF; Li = 0 H; Pi = 0.75 W

1. Voc or Vt < Vmax, Isc or It < Imax, Ca > Ci + Ccable, La > Li + Lcable.
2. Dust-tight conduit seal must be used when installed in Class II and Class III environments.
3. Control equipment connected to barrier must not use or generate more than 250 Vrms or Vdc.
4. Installation should be in accordance with ANSI/ISA RPA12.6 "Installation of Intrinsically Safe Systems for Hazardous (Classified) Locations" and the National Electrical Code (ANSI/NFPA 70).
5. The configuration of associated apparatus for each sensor wiring pair must be FMRC Approved.
6. Associated apparatus manufacturer's installation drawing must be followed when installing this equipment.
7. To maintain intrinsic safety, wiring associated with each sensor must be run in separate cables or separate shields connected to intrinsically safe (associated apparatus) ground.
8. Switches and/or transmitter are optional based on model number. (if more than 2 switches, follow instructions above for each switch.)
9. Conduit Grounding - Upon installation verify electrical continuity between conduit and ground terminal.
10. Substitution of components may impair hazardous location safety.

INSTALLATION NOTES (Ex ia IIC T4):

Entity Parameters: Ui = 30 V; Ii = 100 mA; Ci = 66 nF; Li = 0 H; Pi = 0.75 W

1. Voc or Vt < Ui, Isc or It < Ii, Ca > Ci + Ccable, La > Li + Lcable.
2. Dust-tight conduit seal must be used when installed in Zone 20, Zone 21, and Zone 22 environments or where Ingress Protection of IP67 is required.
3. Control equipment connected to barrier must not use or generate more than 250 Vrms or Vdc.
4. Installation should be in accordance with appropriate local code or practice.
5. The configuration of associated apparatus for each sensor wiring pair or solenoid wiring pair must be approved.
6. Associated apparatus manufacturer's installation drawing must be followed when installing this equipment.
7. To maintain intrinsic safety, wiring associated with each sensor or solenoid coil wiring must be run in separate cables or separate shields connected to intrinsically safe (associated apparatus) ground.
8. Conduit Grounding - Upon installation verify electrical continuity between conduit and ground terminal.
9. Resistance between Intrinsic Safe Ground and earth ground must be less than one ohm.
10. Substitution of components may impair hazardous location safety.

REVISIONS				
F	14247	04/23/19	RB	
E	13398	08/23/17	RB	
D	11363	12/29/15	RB	
REVISION	ECO	DATE	BY	

TOLERANCES* (UNLESS OTHERWISE SPECIFIED):
X.XXX ± .005 ANGLES ± 0° 30'
X.XX ± .010 FINISH *f* 125 RMS
X/X ± .015 *DIMENSIONS: INCHES (UNLESS OTHERWISE SPECIFIED)

DR. SK
CHK. BL
APPD. RK

TITLE I.S. CONTROL, QUARTZ SERIES
SCALE NS SHEET 1 OF 9
SIZE A DATE 6/15/2007

StoneL®
NELES USA INC., FERGUS FALLS, MN 56537 USA
DRAWING NO. 105193 REV. F

7.1 Controlled installation drawings continued

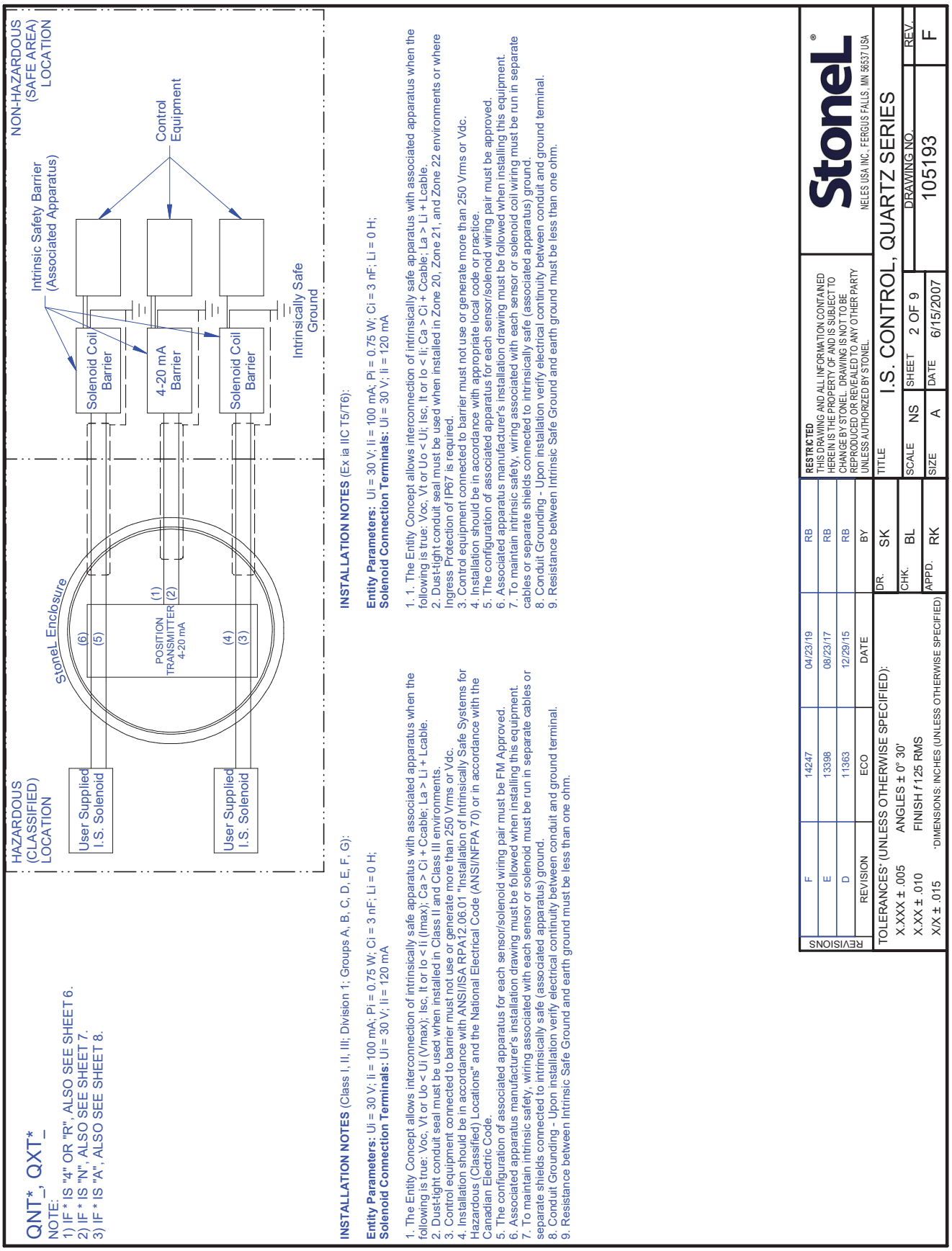

7.1 Controlled installation drawings continued

QNB*, QXB*, QNC*, QXC*_

NOTE:
1) IF * IS "J", ALSO SEE SHEET 4.
2) IF * IS "M", ALSO SEE SHEET 5.
3) IF * IS "4" OR "R", ALSO SEE SHEET 6.
4) IF * IS "N", ALSO SEE SHEET 7.
5) IF * IS "A", ALSO SEE SHEET 8.

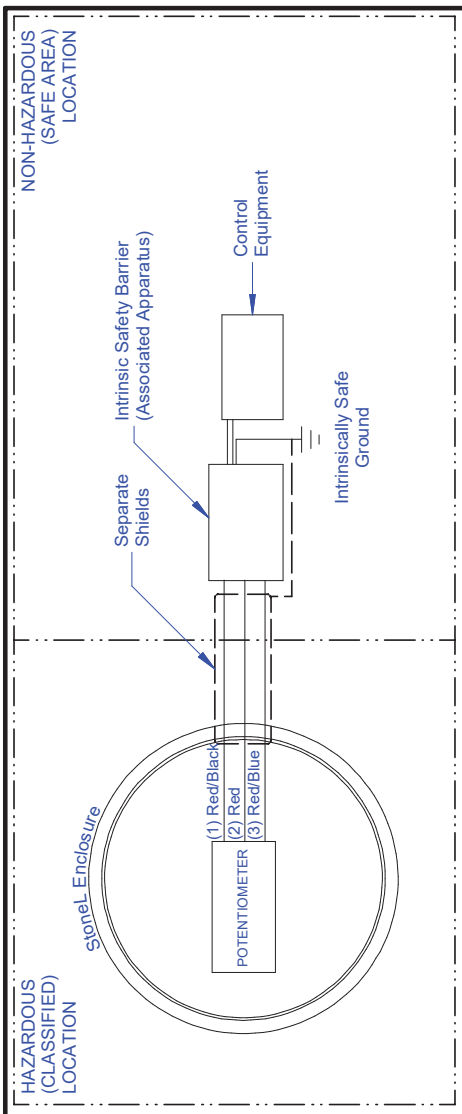

INSTALLATION NOTES (Class I, II, III; Division 1; Groups A, B, C, D, E, F, G):

Entry Parameters: Vmax = 26 V; Imax = 14 mA; Ci = 0 F; Li = 0 H; Pi = 50 mW

1. Voc or Vt < Vmax, Isc or It < Imax, Ca > Ci + Ccable, La > Li + Lcable.
2. Dust-tight conduit seal must be used when installed in Class II and Class III environments.
3. Control equipment connected to barrier must not use or generate more than 250 Vrms or Vdc.
4. Installation should be in accordance with ANSI/ISA RPA12.6 "Installation of Intrinsically Safe Systems for Hazardous (Classified) Locations" and the National Electrical Code (ANSI/NFPA 70).
5. The configuration of associated apparatus for each sensor wiring pair must be FMRC Approved.
6. Associated apparatus manufacturer's installation drawing must be followed when installing this equipment.
7. To maintain intrinsic safety, wiring associated with each sensor must be run in separate cables or separate shields connected to intrinsically safe (associated apparatus) ground.
8. Switches and/or pontentiometer are optional based on model number. (if more than 2 switches, follow instructions above for each switch.)
9. Conduit Grounding - Upon installation verify electrical continuity between conduit and ground terminal.
10. Substitution of components may impair hazardous location safety.

INSTALLATION NOTES (Ex ia IIC T5/T6):

Entry Parameters: Ui = 26 V; Ii = 14 mA; Ci = 0 F; Li = 0 H; Pi = 50 mW

1. Voc or Vt < Ui, Isc or It < Ii, Ca > Ci + Ccable, La > Li + Lcable.
2. Dust-tight conduit seal must be used when installed in Zone 20, Zone 21, and Zone 22 environments or where Ingress Protection of IP67 is required.
3. Control equipment connected to barrier must not use or generate more than 250 Vrms or Vdc.
4. Installation should be in accordance with appropriate local code or practice.
5. The configuration of associated apparatus for each sensor wiring pair or solenoid wiring pair must be approved.
6. Associated apparatus manufacturer's installation drawing must be followed when installing this equipment.
7. To maintain intrinsic safety, wiring associated with each sensor or solenoid coil wiring must be run in separate cables or separate shields connected to intrinsically safe (associated apparatus) ground.
8. Conduit Grounding - Upon installation verify electrical continuity between conduit and ground terminal.
9. Resistance between Intrinsic Safe Ground and earth ground must be less than one ohm.
10. Substitution of components may impair hazardous location safety.

REVISIONS

REVISION	ECO	DATE	BY
F	14247	04/23/19	RB
E	13398	08/23/17	RB
D	11363	12/29/15	RB

TOLERANCES' (UNLESS OTHERWISE SPECIFIED):
X.XXX ± .005 ANGLES ± 0° 30'
X.XX ± .010 FINISH f 125 RMS
X/X ± .015 ·DIMENSIONS: INCHES (UNLESS OTHERWISE SPECIFIED)

DR. SK
CHK. BL
APPD. RK

TITLE I.S. CONTROL, QUARTZ SERIES
SCALE NS SHEET 3 OF 9
SIZE A DATE 6/15/2007
DRAWING NO 105193 REV F

StoneL®
NELES USA INC., FERGUS FALLS, MN 56537 USA

7.1 Controlled installation drawings continued

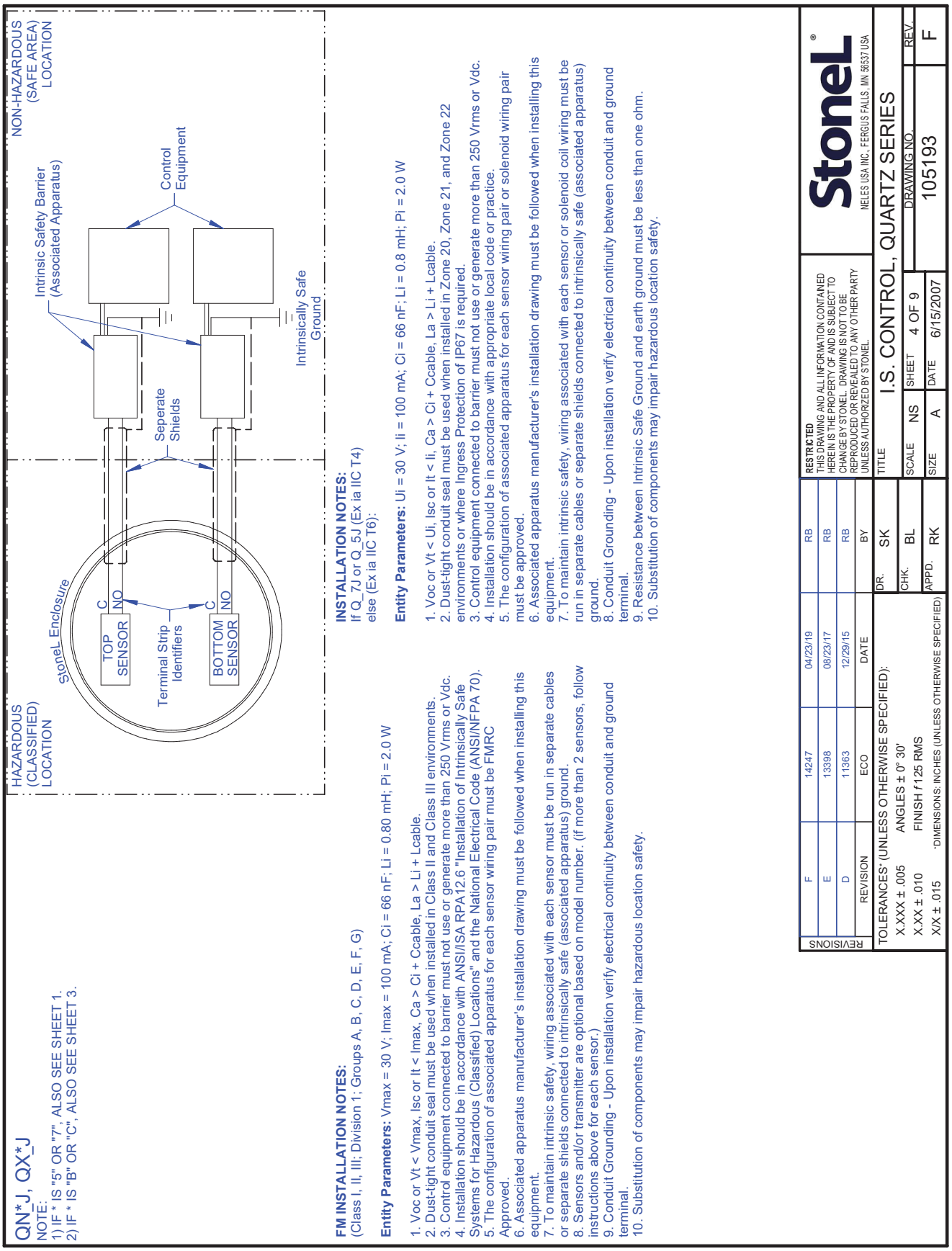

7.1 Controlled installation drawings continued

QN*M, QX*M

NOTE:
1) IF * IS "5" OR "7", ALSO SEE SHEET 1.
2) IF * IS "B" OR "C", ALSO SEE SHEET 3.

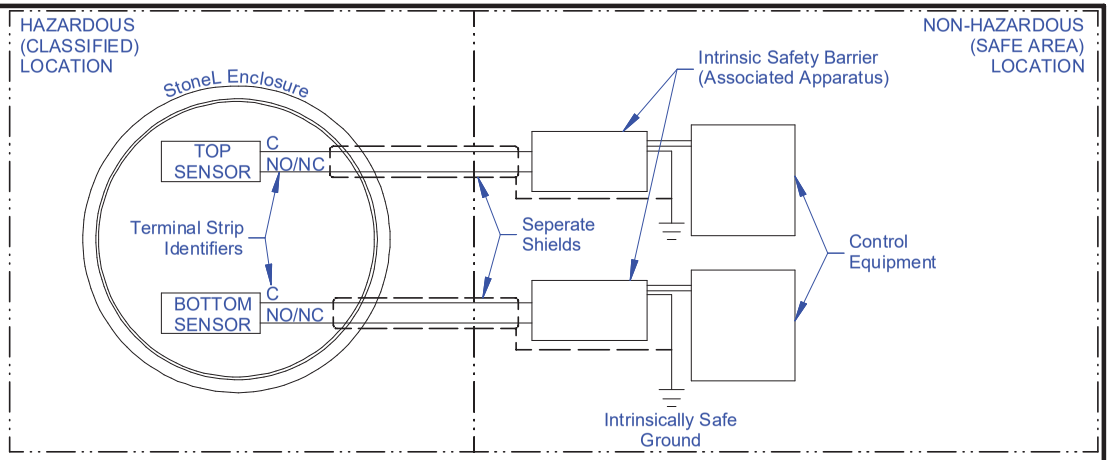

FM INSTALLATION NOTES:
(Class I, II, III; Division 1; Groups A, B, C, D, E, F, G)

Entity Parameters: Vmax = 30 V; Imax = 100 mA; Ci = 66 nF; Li = 0.80 mH; Pi = 2.0 W

1. Voc or Vt < Vmax, Isc or It < Imax, Ca > Ci + Ccable, La > Li + Lcable.
2. Dust-tight conduit seal must be used when installed in Class II and Class III environments.
3. Control equipment connected to barrier must not use or generate more than 250 Vrms or Vdc.
4. Installation should be in accordance with ANSI/ISA RPA12.6 "Installation of Intrinsically Safe Systems for Hazardous(Classified) Locations" and the National Electrical Code (ANSI/NFPA 70).
5. The configuration of associated apparatus for each sensor wiring pair must be FMRC Approved.
6. Associated apparatus manufacturer's installation drawing must be followed when installing this equipment.
7. To maintain intrinsic safety, wiring associated with each sensor must be run in separate cables or separate shields connected to intrinsically safe (associated apparatus) ground.
8. Sensors and/or transmitter are optional based on model number. (if more than 2 sensors, follow instructions above for each sensor.)
9. Conduit Grounding - Upon installation verify electrical continuity between conduit and ground terminal.
10. Substitution of components may impair hazardous location safety.

INSTALLATION NOTES:
If Q_7M or Q_5M (Ex ia IIC T4)
else (Ex ia IIC T6):

Entity Parameters: Ui = 30 V; Ii = 100 mA; Ci = 66 nF; Li = 0.8 mH; Pi = 2.0 W

1. Voc or Vt < Ui, Isc or It < Ii, Ca > Ci + Ccable, La > Li + Lcable.
2. Dust-tight conduit seal must be used when installed in Zone 20, Zone 21, and Zone 22 environments or where Ingress Protection of IP67 is required.
3. Control equipment connected to barrier must not use or generate more than 250 Vrms or Vdc.
4. Installation should be in accordance with appropriate local code or practice.
5. The configuration of associated apparatus for each sensor wiring pair or solenoid wiring pair must be approved.
6. Associated apparatus manufacturer's installation drawing must be followed when installing this equipment.
7. To maintain intrinsic safety, wiring associated with each sensor or solenoid coil wiring must be run in separate cables or separate shields connected to intrinsically safe (associated apparatus) ground.
8. Conduit Grounding - Upon installation verify electrical continuity between conduit and ground terminal.
9. Resistance between Intrinsic Safe Ground and earth ground must be less than one ohm.
10. Substitution of components may impair hazardous location safety.

REVISIONS			
F	14247	04/23/19	RB
E	13398	08/23/17	RB
D	11363	12/29/15	RB
REVISION	ECO	DATE	BY

TOLERANCES* (UNLESS OTHERWISE SPECIFIED):
X.XXX ± .005 ANGLES ± 0° 30'
X.XX ± .010 FINISH f125 RMS
X/X ± .015 *DIMENSIONS: INCHES (UNLESS OTHERWISE SPECIFIED)

DR. SK
CHK. BL
APPD. RK

StoneL®
NELES USA INC., FERGUS FALLS, MN 56537 USA

TITLE I.S. CONTROL, QUARTZ SERIES

SCALE	NS	SHEET	5 OF 9	DRAWING NO.	REV.
SIZE	A	DATE	6/15/2007	105193	F

7.1 Controlled installation drawings continued

QN44, QX44, QC45, QN45, QX45, QN*4, QX*4, QN*R, QX*R

NOTE:
1) IF * IS "5" OR "7", ALSO SEE SHEET 1.
2) IF * IS "T", ALSO SEE SHEET 2.
3) IF * IS "B" OR "C", ALSO SEE SHEET 3.

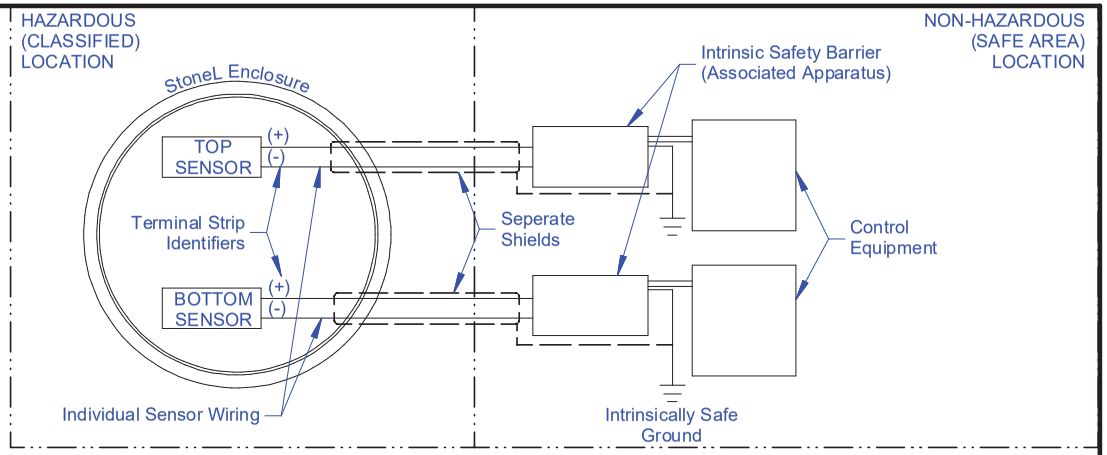

INSTALLATION NOTES (Class I, II, III; Division 1; Groups A, B, C, D, E, F, G):

Entity Parameters:
QN44; QX44 Sensors: Ui (Vmax) = 22 V; Ii (Imax) =120 mA; Ci = 98 nF; Li = 0.8 mH; Pi = 2.0 W
QC45, QN45; QX45 Sensors: Ui (Vmax) = 22 V; Ii (Imax) =120 mA; Ci = 3 nF; Li = 0 H; Pi = 0.4 W
Solenoid Connection Terminals: Ui = 30V, Ii = 120mA

1. Uo < Ui (Vmax); Io < Ii (Imax); Ca > Ci + Ccable, La > Li + Lcable.
2. Control equipment connected to barrier must not use or generate more than 250 Vrms or Vdc.
3. Installation should be in accordance with ANSI/ISA RPA12.6.01 "Installation of Intrinsically Safe Systems for Hazardous (Classified) Locations" and the National Electrical Code (ANSI/NFPA 70) or in accordance with the Canadian Electric Code.
4. Associated apparatus manufacturer's installation drawing must be followed when installing this equipment.
5. To maintain intrinsic safety, wiring associated with each sensor or solenoid coil wiring must be run in separate cables or separate shields connected to intrinsically safe (associated apparatus) ground. Each Sensor and Solenoid coil shall be wired as separate intrinsically safe circuits.
6. Conduit Grounding - Upon installation verify electrical continuity between conduit and ground terminal.
7. Resistance between Intrinsic Safe Ground and earth ground must be less than one ohm.
8. Parts of the enclosure are non-conducting and may generate an ignition-capable level of electrostatic charge under certain extreme conditions. The user should ensure that the equipment is not installed in location where it may be subjected to external conditions (such as high-pressure steam) which might cause a build-up of electrostatic charge on non-conducting surfaces. Additionally, cleaning of the equipment should only be done with a damp cloth.
9. Substitution of components may impair hazardous location safety.

INSTALLATION NOTES
If Q_74, Q_54, Q_7R or Q_5R (Ex ia IIC T4)
else (Ex ia IIC T6):

Entity Parameters:
QN44; QX44 Sensors: Ui = 22 V; Ii = 120 mA; Ci = 98 nF; Li = 0.8 mH; Pi = 2.0W
QC45, QN45; QX45 Sensors: Ui = 22 V; Ii =120 mA; Ci = 3 nF; Li = 0 H; Pi = 0.4 W
Solenoid Connection Terminals: Ui = 30V, Ii = 120mA

1. Voc or Vt < Ui, Isc or It < Ii, Ca > Ci + Ccable, La > Li + Lcable.
2. Dust-tight conduit seal must be used when installed in Zone 20, Zone 21, and Zone 22 environments or where Ingress Protection of IP67 is required.
3. Control equipment connected to barrier must not use or generate more than 250 Vrms or Vdc.
4. Installation should be in accordance with appropriate local code or practice.
5. The configuration of associated apparatus for each sensor wiring pair or solenoid wiring pair must be approved.
6. Associated apparatus manufacturer's installation drawing must be followed when installing this equipment.
7. To maintain intrinsic safety, wiring associated with each sensor or solenoid coil wiring must be run in separate cables or separate shields connected to intrinsically safe (associated apparatus) ground.
8. Conduit Grounding - Upon installation verify electrical continuity between conduit and ground terminal.
9. Resistance between Intrinsic Safe Ground and earth ground must be less than one ohm.
10. Substitution of components may impair hazardous location safety.

REVISIONS			
F	14247	04/23/19	RB
E	13398	08/23/17	RB
D	11363	12/29/15	RB
REVISION	ECO	DATE	BY

TOLERANCES* (UNLESS OTHERWISE SPECIFIED):
X.XXX ± .005 ANGLES ± 0° 30'
X.XX ± .010 FINISH f125 RMS
X/X ± .015 *DIMENSIONS: INCHES (UNLESS OTHERWISE SPECIFIED)

DR. SK
CHK. BL
APPD. RK

StoneL®
NELES USA INC., FERGUS FALLS, MN 56537 USA

TITLE I.S. CONTROL, QUARTZ SERIES

SCALE	NS	SHEET	6 OF 9	DRAWING NO.	REV.
SIZE	A	DATE	6/15/2007	105193	F

7.1 Controlled installation drawings continued

QN*N, QX*N

NOTE:
1) IF * IS "5" OR "7", ALSO SEE SHEET 1.
2) IF * IS "T", ALSO SEE SHEET 2.
3) IF * IS "B" OR "C", ALSO SEE SHEET 3.

For QN_N, QX_N Temperature Codes, Ambient Temperatures and Energy Limitation Parameters see Table below:

For T6 Ta* =	For T5 Ta* =	For T4...T1 Ta* =	Ui V	Ii mA	Pi mW	Ci nF	Li mH
-25°C to 56°C	-25°C to 68°C	-25°C to 80°C	16	25	34	40	0.05
-25°C to 49°C	-25°C to 61°C	-25°C to 80°C	16	25	64	40	0.05
-25°C to 28°C	-25°C to 40°C	-25°C to 68°C	16	52	169	40	0.05
-25°C to 13°C	-25°C to 25°C	-25°C to 53°C	16	76	242	40	0.05

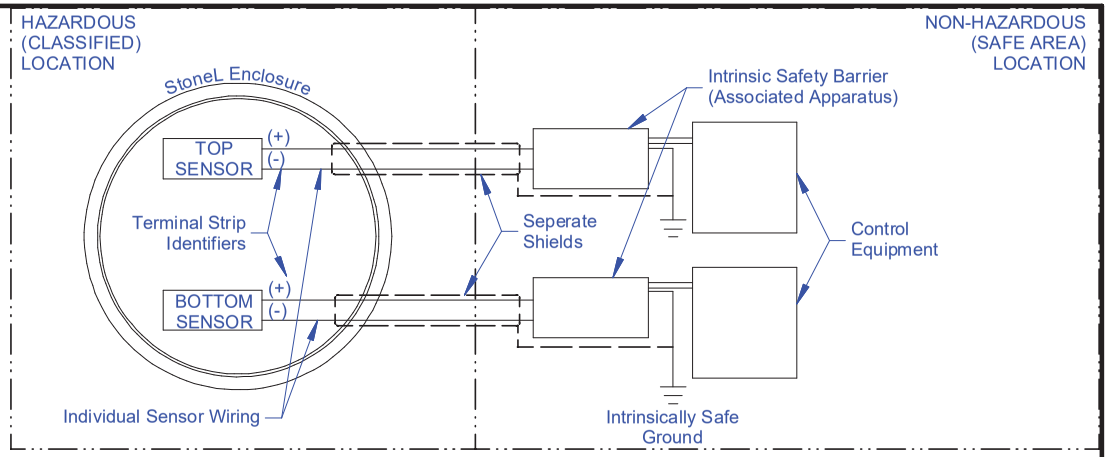

INSTALLATION NOTES (Class I, II, III; Division 1; Groups A, B, C, D, E, F, G):

1. Uo < Ui (Vmax); Io < Ii (Imax); Ca > Ci + Ccable, La > Li + Lcable.
2. Control equipment connected to barrier must not use or generate more than 250 Vrms or Vdc.
3. Installation should be in accordance with ANSI/ISA RPA12.6.01 "Installation of Intrinsically Safe Systems for Hazardous (Classified) Locations" and the National Electrical Code (ANSI/NFPA 70) or in accordance with the Canadian Electric Code.
4. Associated apparatus manufacturer's installation drawing must be followed when installing this equipment.
5. To maintain intrinsic safety, wiring associated with each sensor or solenoid coil wiring must be run in separate cables or separate shields connected to intrinsically safe (associated apparatus) ground. Each Sensor and Solenoid coil shall be wired as separate intrinsically safe circuits.
6. Conduit Grounding - Upon installation verify electrical continuity between conduit and ground terminal.
7. Resistance between Intrinsic Safe Ground and earth ground must be less than one ohm.
8. Parts of the enclosure are non-conducting and may generate an ignition-capable level of electrostatic charge under certain extreme conditions. The user should ensure that the equipment is not installed in location where it may be subjected to external conditions (such as high-pressure steam) which might cause a build-up of electrostatic charge on non-conducting surfaces. Additionally, cleaning of the equipment should only be done with a damp cloth.
9. Substitution of components may impair hazardous location safety.

INSTALLATION NOTES
If Q_7N or Q_5N (Ex ia IIC T4...T1 Ta*)
else (Ex ia IIC T6...T1 Ta*):

1. Voc or Vt < Ui, Isc or It < Ii, Ca > Ci + Ccable, La > Li + Lcable.
2. Dust-tight conduit seal must be used when installed in Zone 20, Zone 21, and Zone 22 environments or where Ingress Protection of IP67 is required.
3. Control equipment connected to barrier must not use or generate more than 250 Vrms or Vdc.
4. Installation should be in accordance with appropriate local code or practice.
5. The configuration of associated apparatus for each sensor wiring pair or solenoid wiring pair must be approved.
6. Associated apparatus manufacturer's installation drawing must be followed when installing this equipment.
7. To maintain intrinsic safety, wiring associated with each sensor or solenoid coil wiring must be run in separate cables or separate shields connected to intrinsically safe (associated apparatus) ground.
8. Conduit Grounding - Upon installation verify electrical continuity between conduit and ground terminal.
9. Resistance between Intrinsic Safe Ground and earth ground must be less than one ohm.
10. Substitution of components may impair hazardous location safety.

REVISIONS			
F	14247	04/23/19	RB
E	13398	08/23/17	RB
D	11363	12/29/15	RB
REVISION	ECO	DATE	BY

TOLERANCES* (UNLESS OTHERWISE SPECIFIED):
X.XXX ± .005 ANGLES ± 0° 30'
X.XX ± .010 FINISH f125 RMS
X/X ± .015 *DIMENSIONS: INCHES (UNLESS OTHERWISE SPECIFIED)

DR. SK
CHK. BL
APPD. RK

StoneL®
NELES USA INC., FERGUS FALLS, MN 56537 USA

TITLE I.S. CONTROL, QUARTZ SERIES
SCALE NS | SHEET 7 OF 9 | DRAWING NO. 105193 | REV. F
SIZE A | DATE 6/15/2007

7.1 Controlled installation drawings continued

QN*A, QX*A

NOTE:
1) IF * IS "5" OR "7", ALSO SEE SHEET 1.
2) IF * IS "T", ALSO SEE SHEET 2.
3) IF * IS "B" OR "C", ALSO SEE SHEET 3.

For QN_A, QX_A Temperature Codes, Ambient Temperatures and Energy Limitation Parameters see Table below:

For T6 Ta* =	For T5 Ta* =	For T4...T1 Ta* =	Ui V	Ii mA	Pi mW	Ci nF	Li mH
-40°C to 57°C	-40°C to 69°C	-40°C to 80°C	16	25	34	50	0.15
-40°C to 52°C	-40°C to 64°C	-40°C to 80°C	16	25	64	50	0.15
-40°C to 34°C	-40°C to 46°C	-40°C to 74°C	16	52	169	50	0.15
-40°C to 22°C	-40°C to 34°C	-40°C to 61°C	16	76	242	50	0.15

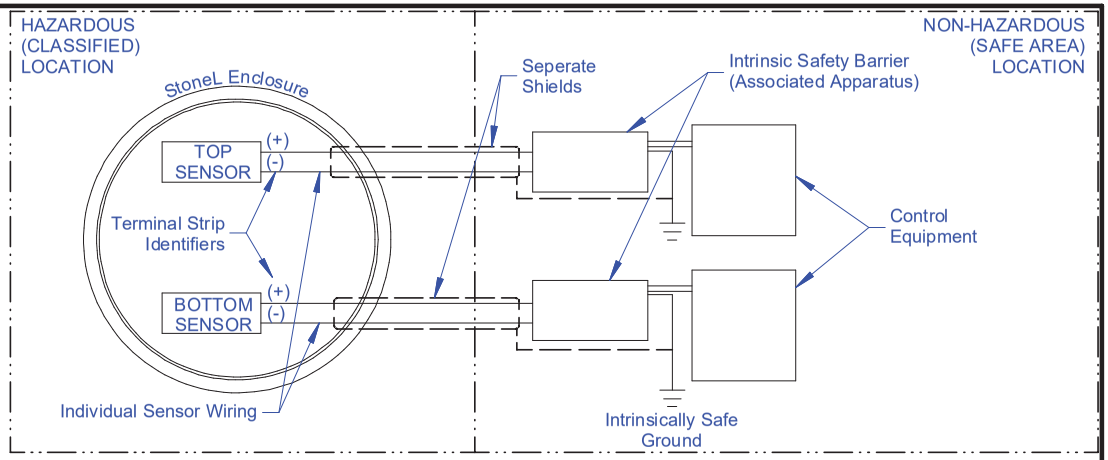

INSTALLATION NOTES (Class I, II, III; Division 1; Groups A, B, C, D, E, F, G):

1. Uo < Ui (Vmax); Io < Ii (Imax); Ca > Ci + Ccable, La > Li + Lcable.
2. Control equipment connected to barrier must not use or generate more than 250 Vrms or Vdc.
3. Installation should be in accordance with ANSI/ISA RPA12.6.01 "Installation of Intrinsically Safe Systems for Hazardous (Classified) Locations" and the National Electrical Code (ANSI/NFPA 70) or in accordance with the Canadian Electric Code.
4. Associated apparatus manufacturer's installation drawing must be followed when installing this equipment.
5. To maintain intrinsic safety, wiring associated with each sensor or solenoid coil wiring must be run in separate cables or separate shields connected to intrinsically safe (associated apparatus) ground. Each Sensor and Solenoid coil shall be wired as separate intrinsically safe circuits.
6. Conduit Grounding - Upon installation verify electrical continuity between conduit and ground terminal.
7. Resistance between Intrinsic Safe Ground and earth ground must be less than one ohm.
8. Parts of the enclosure are non-conducting and may generate an ignition-capable level of electrostatic charge under certain extreme conditions. The user should ensure that the equipment is not installed in location where it may be subjected to external conditions (such as high-pressure steam) which might cause a build-up of electrostatic charge on non-conducting surfaces. Additionally, cleaning of the equipment should only be done with a damp cloth.
9. Substitution of components may impair hazardous location safety.

INSTALLATION NOTES:
If Q_7A or Q_5A (Ex ia IIC T4...T1 Ta*)
else (Ex ia IIC T6...T1 Ta*)

1. Voc or Vt < Ui, Isc or It < Ii, Ca > Ci + Ccable, La > Li + Lcable.
2. Dust-tight conduit seal must be used when installed in Zone 20, Zone 21, and Zone 22 environments or where Ingress Protection of IP67 is required.
3. Control equipment connected to barrier must not use or generate more than 250 Vrms or Vdc.
4. Installation should be in accordance with appropriate local code or practice.
5. The configuration of associated apparatus for each sensor wiring pair or solenoid wiring pair must be approved.
6. Associated apparatus manufacturer's installation drawing must be followed when installing this equipment.
7. To maintain intrinsic safety, wiring associated with each sensor or solenoid coil wiring must be run in separate cables or separate shields connected to intrinsically safe (associated apparatus) ground.
8. Conduit Grounding - Upon installation verify electrical continuity between conduit and ground terminal.
9. Resistance between Intrinsic Safe Ground and earth ground must be less than one ohm.
10. Substitution of components may impair hazardous location safety.

REVISIONS			
F	14247	04/23/19	RB
E	13398	08/23/17	RB
D	11363	12/29/15	RB
REVISION	ECO	DATE	BY

TOLERANCES* (UNLESS OTHERWISE SPECIFIED):
X.XXX ± .005 ANGLES ± 0° 30'
X.XX ± .010 FINISH f125 RMS
X/X ± .015 *DIMENSIONS: INCHES (UNLESS OTHERWISE SPECIFIED)

DR. SK
CHK. BL
APPD. RK

StoneL®
NELES USA INC., FERGUS FALLS, MN 56537 USA

TITLE I.S. CONTROL, QUARTZ SERIES

SCALE	NS	SHEET	8 OF 9	DRAWING NO.	REV.
SIZE	A	DATE	6/15/2007	105193	F

7.1 Controlled installation drawings continued

QN*B, QX*B

For QN_B, QX_B Temperature Codes, Ambient Temperatures and Energy Limitation Parameters see Table below:

For T6 Ta* =	For T5 Ta* =	For T4...T1 Ta* =	Ui V	Ii mA	Pi mW	Ci nF	Li mH
-25°C to 57°C	-25°C to 69°C	-25°C to 80°C	16	25	34	100	0.20
-25°C to 52°C	-25°C to 64°C	-25°C to 80°C	16	25	64	100	0.20
-25°C to 34°C	-25°C to 46°C	-25°C to 74°C	16	52	169	100	0.20
-25°C to 22°C	-25°C to 34°C	-25°C to 61°C	16	76	242	100	0.20

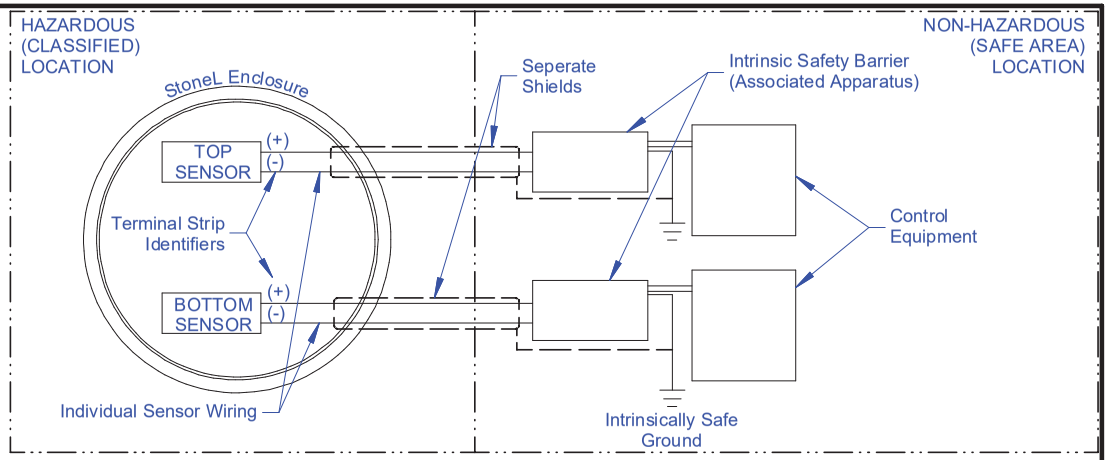

INSTALLATION NOTES (Class I, II, III; Division 1; Groups A, B, C, D, E, F, G):

1. Uo < Ui (Vmax); Io < Ii (Imax); Ca > Ci + Ccable, La > Li + Lcable.
2. Control equipment connected to barrier must not use or generate more than 250 Vrms or Vdc.
3. Installation should be in accordance with ANSI/ISA RPA12.6.01 "Installation of Intrinsically Safe Systems for Hazardous (Classified) Locations" and the National Electrical Code (ANSI/NFPA 70) or in accordance with the Canadian Electric Code.
4. Associated apparatus manufacturer's installation drawing must be followed when installing this equipment.
5. To maintain intrinsic safety, wiring associated with each sensor or solenoid coil wiring must be run in separate cables or separate shields connected to intrinsically safe (associated apparatus) ground. Each Sensor and Solenoid coil shall be wired as separate intrinsically safe circuits.
6. Conduit Grounding - Upon installation verify electrical continuity between conduit and ground terminal.
7. Resistance between Intrinsic Safe Ground and earth ground must be less than one ohm.
8. Parts of the enclosure are non-conducting and may generate an ignition-capable level of electrostatic charge under certain extreme conditions. The user should ensure that the equipment is not installed in location where it may be subjected to external conditions (such as high-pressure steam) which might cause a build-up of electrostatic charge on non-conducting surfaces. Additionally, cleaning of the equipment should only be done with a damp cloth.
9. Substitution of components may impair hazardous location safety.

INSTALLATION NOTES (Ex ia IIC T6...T1 Ta*):

1. Voc or Vt < Ui, Isc or It < Ii, Ca > Ci + Ccable, La > Li + Lcable.
2. Dust-tight conduit seal must be used when installed in Zone 20, Zone 21, and Zone 22 environments or where Ingress Protection of IP67 is required.
3. Control equipment connected to barrier must not use or generate more than 250 Vrms or Vdc.
4. Installation should be in accordance with appropriate local code or practice.
5. The configuration of associated apparatus for each sensor wiring pair or solenoid wiring pair must be approved.
6. Associated apparatus manufacturer's installation drawing must be followed when installing this equipment.
7. To maintain intrinsic safety, wiring associated with each sensor or solenoid coil wiring must be run in separate cables or separate shields connected to intrinsically safe (associated apparatus) ground.
8. Conduit Grounding - Upon installation verify electrical continuity between conduit and ground terminal.
9. Resistance between Intrinsic Safe Ground and earth ground must be less than one ohm.
10. Substitution of components may impair hazardous location safety.

REVISIONS			
F	14247	04/23/19	RB
E	13398	08/23/17	RB
D	11363	12/29/15	RB
REVISION	ECO	DATE	BY

TOLERANCES* (UNLESS OTHERWISE SPECIFIED):
X.XXX ± .005 ANGLES ± 0° 30'
X.XX ± .010 FINISH f125 RMS
X/X ± .015 *DIMENSIONS: INCHES (UNLESS OTHERWISE SPECIFIED)

DR. SK
CHK. BL
APPD. RK

StoneL®
NELES USA INC., FERGUS FALLS, MN 56537 USA

TITLE I.S. CONTROL, QUARTZ SERIES

SCALE	NS	SHEET	9 OF 9	DRAWING NO.	REV.
SIZE	A	DATE	6/15/2007	105193	F

Reinventing reliability