PDTF Series – Temperature Switch

- 70°F to 285°F (20°C to 140°C)
- Withstands Acceleration to 8G
- Small Capillary for Harsh Applications

Gems PDTF Series is a factory set temperature switch for the protection of all types of internal combustion engines, pumps, compressors, gear boxes, hydraulic reservoirs, marine and industrial power plants. Model PDTF will withstand acceleration to 8G. Its compact and rugged construction allow it to be mounted in the toughest OEM applications. The PDTF utilizes a liquid-filled capillary to sense temperature changes. The liquid expands as the temperature increases, causing the capillary pressure to increase.

Specifications

Maximum Temperature	55°F (25°C) above Set Point
Switch	Resistive 5 Amp; Inductive 2 Amp @ 12/24 VDC and 125/250 VAC
Setting Tolerance	±6°F (±3°C)
Wetted Parts	
Housing	Zinc Plated Steel
Capillary	Brass
Electrical Termination	DIN 43650A IP65; Flying Leads IP65
Maximum Pressure	350 psi (25 bar)
Deadband	19°F (9°C) Average
Approvals	CE
Weight, Approximate	0.3 lbs. (0.14 kg)

How To Order

Use the **Bold** characters from the chart below to construct a product code.

SELECT **PDTF -100°F -R -8MNZ -C -FL18 -WF**

1. Set Point
   Specify 70°F - 285°F (20°C - 140°C) in °F or °C
2. Direction
   -R Rising; **-F** Falling
3. Medium Connection
   -6M 3/8″ NPT Male; **-8M** 1/2″ NPT Male
4. Circuit[1]
   -C SPDT; **-A** SPST/NO; **-B** SPST/NC
5. Electrical Termination
   -SP 1/4″ Spade; **-H** DIN 43650A Male Half Only;
   -HC DIN 43650A 9mm Cable Clamp; **-HN** DIN 43650A 1/2″ Conduit (Female);
   -FLXX Flying Leads – Specify 18″ to 48″ (18″ Standard);
   -CABXX 18 AWG PVC Cable – Specify 36″ to 120″;
   -FLSXX Flying Leads with PVC shrink tubing – Specify 18″ to 48″ (18″ Standard);
6. Options[2]
   -WF Weather Pack Connector, Female;
   -WM Weather Pack Connector, Male;
   -DE Deutsch Connector, Male, DT04 Series

Notes:
1. Lead wires required on all selections except **-C** SPDT option.
2. Other Connectors Available. Consult Factory.

Dimensions

Spades

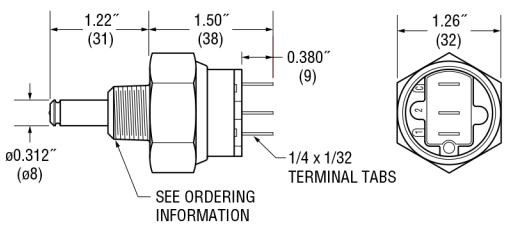

Flying Lead

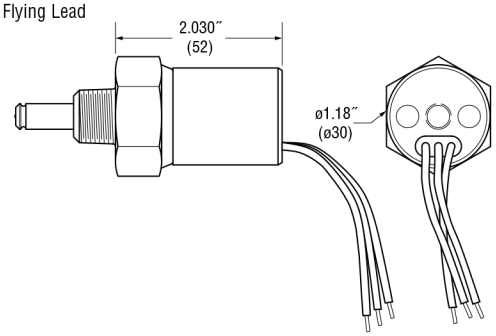
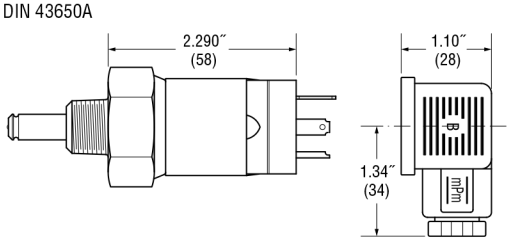
DIN 43650A